SPECIAL 32-PAGE SECTION VIDEO ENTERTAINMENT

Radio-Electronics®

$1.25 JAN. 1982

Build this
VIDEO SYNC STABILIZER ▸
for rock-steady pictures

VIDEO ENTERTAINMENT IN THE HOME
- ★The Entertainment Center
- ★Videodisc Systems
- ★Videocassette Recorders
- ★Accessory Gadgets
- ★Video Cameras
- ★Projection TV
- ★Video Games
- ★Video In The Future

Build a
CX PHONO DECODER

PLUS:
- Hobby Corner
- Computer Corner
- Service Clinic
- State-Of-Solid-State Equipment Reports

01
0 71896 48783

EAST/WEST

INTERTEC SUPERBRAIN 64K RAM	**$2799**
QD SUPERBRAIN	$2999
NEC 5510 SPINWRITER (7710)	**$2345**
NEC 5520 SPINWRITER (7720)	$2695
NEC 5530 SPINWRITER (7730)	$2345
NEC 12" MONITOR	$ 229

We accept C.O.D.'s • Stock Shipments Same Day or Next • No surcharge for Credit Cards

Ω OMEGA SALES CO.

All Equipment Factory Fresh w/MFT Warranty We carry the complete line of Personal Software

OKIDATA MICROLINE-80	**$ 399**
OKIDATA MICROLINE-82	$ 529
OKIDATA MICROLINE-83	$ 769
DIABLO 630	$1995
APPLE II PLUS 48K	**$1139**
APPLE DISK w/3.3 DOS Controller	$ 525
APPLE DISK w/o Controller	$ 449
HAZELTINE 1420	$ 799
NORTHSTAR HORIZON II 32K QD	$2925
ANADEX DP-9500/9501	$1249
TELEVIDEO 912C	**$ 669**
TELEVIDEO 920C	$ 729
TELEVIDEO 950	$ 929
CBM 8032 COMPUTER	**$1149**
CBM 8050 DISK DRIVE	$1349
CBM 4032 COMPUTER	$1029
CBM 4040 DISK DRIVE	$1029
CBM 4022	$ 649
CBM VIC-20	$ 269
LEEDEX/AMDEK 100	**$ 139**
LEEDEX/AMDEK 100G	$ 169
LEEDEX/AMDEK COLOR-1 13" Color Monitor	$ 329
MICROTEK 16K RAMBOARD for Atari	$ 79
MICROTEK 32K	$ 149

EAST COAST
1-800-556-7586

Ω

WEST COAST
1-800-235-3581

PRICES ARE SUBJECT TO CHANGE WITHOUT NOTICE.

ATARI®

CHRISTMAS SPECIALS!

FREE GOLD!

$749

Good thru Dec. 15

Buy an ATARI 800 16K and receive a 14K Gold Bracelet FREE!!

(Actual size Genuine 14K 24.95 retail)

ATARI SPECIALS

ATARI 400 — 16K Personal Computer — $349

ATARI PERIPHERALS

410	Program Recorder	$ 60
810	Disk Drive	$449
820	40 Column Printer	$299
822	40 Column Thermal Printer	$349
825	80 Column Printer	$599
830	Acoustic Modem	$159
850	Interface Module	$139

ATARI ACCESSORIES

CX852	8K RAM Memory Module	$39.95
CX853	16K RAM Memory Module	$89.95
CX30-04	Paddle Controller (pair)	$15.00
CX40-04	Joystick Controller (pair)	$15.00

With any purchase of ATARI Hardware or Software over $500 you can buy the bracelet for only $9.95.

WE CARRY THE COMPLETE LINE OF ATARI SOFTWARE. CALL FOR THE SUPER CHRISTMAS SAVINGS!!!

WEST COAST
1-800-235-3581

OMEGA SALES CO.
3533 Old Conejo Rd. #102
Newbury Park, CA 91320
1-805-499-3678
CA. TOLL FREE 1-800-322-1873

Ω

EAST COAST
1-800-556-7586

OMEGA SALES CO.
12 Meeting St.
Cumberland, RI 02864
1-401-722-1027

OMEGA SALES CO.

CIRCLE 20 ON FREE INFORMATION CARD

Radio-Electronics

THE MAGAZINE FOR NEW IDEAS IN ELECTRONICS

Electronics publishers since 1908

JANUARY 1982 Vol. 53 No. 1

ON THE COVER

Here's a video accessory that you can build for your videocassette recorder. It reforms the video sync pulse and produces rock-steady pictures from pre-recorded videotapes. To get started, turn to page 45.

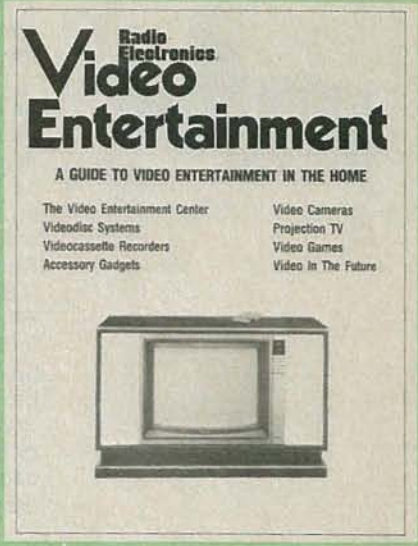

SPECIAL 32-PAGE SECTION covering Video Entertainment. Complete coverage of all the products that make up a video-entertainment center and what the future may bring. Story starts on page 49.

VIDEOTEX PART 3

Due to space limitations caused by the Special Video-Entertainment Section, we were unable to include the conclusion of the Videotex series. Videotex Part 3 will appear, however, in our next issue.

Radio-Electronics, (ISSN 0033-7862) Published monthly by Gernsback Publications, Inc., 200 Park Avenue South, New York, NY 10003. Second-Class Postage Paid at New York, N.Y. and additional mailing offices. One-year subscription rate: U.S.A and U.S. possessions, $13.00, Canada, $16.00. Other countries, $20.50 (cash orders only, payable in U.S.A. currency.) Single copies $1.25.

Subscription Service: Mail all subscription orders, changes, correspondence and Postmaster Notices of undelivered copies (Form 3579) to Radio-Electronics Subscription Service, Box 2520, Boulder, CO 80322.

Radio-Electronics®

Video Entertainment

A GUIDE TO VIDEO ENTERTAINMENT IN THE HOME

The Video Entertainment Center
Videodisc Systems
Videocassette Recorders
Accessory Gadgets
Video Cameras
Projection TV
Video Games
Video In The Future

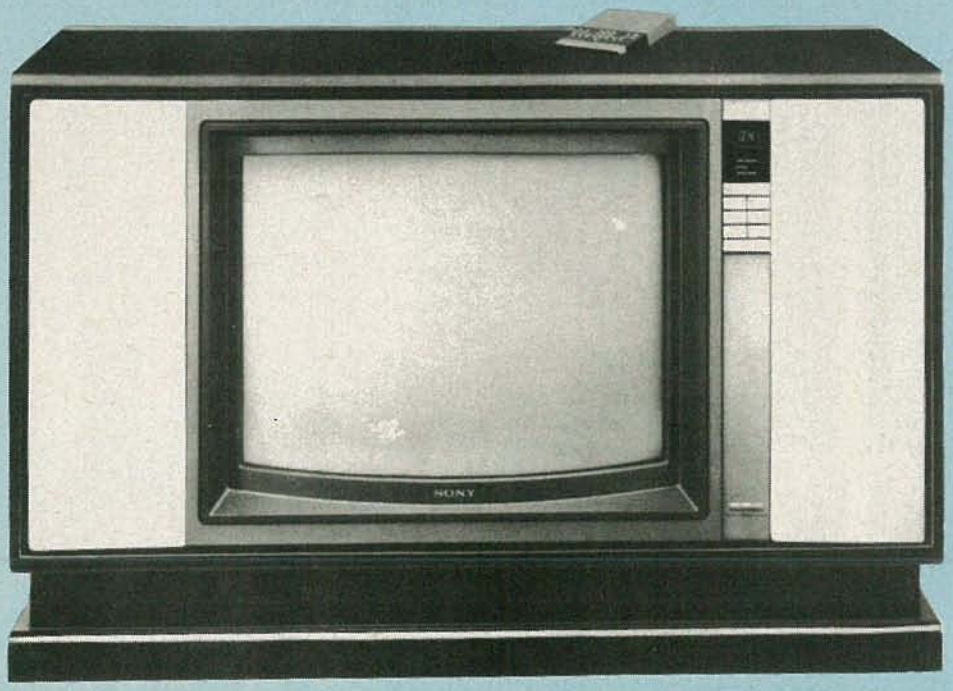

The ENTERTAIN

About five years ago there was an explosion in the video field...
Here's a look at the changes it is going to make in our

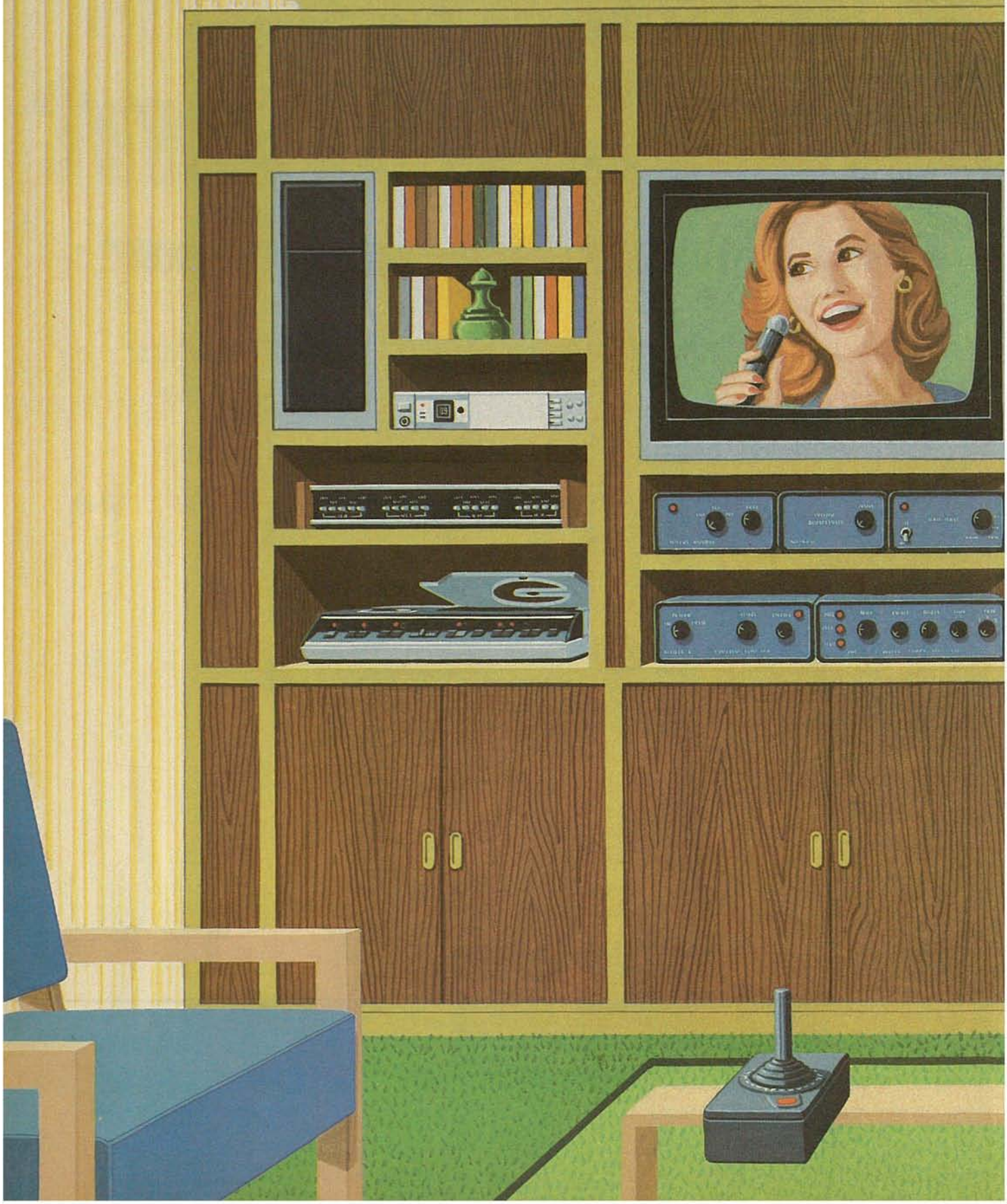

MENT CENTER

ut its effects are just beginning to be felt.
ntertainment and living habits.

ART KLEIMAN
MANAGING EDITOR

IT WAS MID-WEEK AND GEORGE SAT QUIETLY IN HIS LIVING room contemplating his lack of a date for Saturday night. "Well, Saturday's getting closer so I guess I'd better get cracking." With that thought, George ordered in a loud, firm voice, "TV on!" Instantly, a soft female voice responded with "What program do you desire?" as the 10-foot screen hanging on the wall across the room came to life.

George thought for a second and then answered the all-too-human voice with, "Videotex message center." Again, the soft voice responded, but this time with the instruction: "Please use your manual input-device for communication." Simultaneously, the 10-foot screen flashed the words "VIDEOTEX MESSAGE CENTER."

Directly below those words flashed the question: "NATIONAL, STATEWIDE, LOCAL, _____?"

The input device, shaped like a hemisphere, was sitting on the cocktail table. George picked it up and placed each finger of his right hand into an indentation in its surface. Manipulating his fingers, George responded to the question by coding the word "LOCAL." The next question then flashed on the giant screen: "TODAY'S DATE?"

George's expression showed his annoyance. "*When will they ever make computers smart.*" he thought. He entered the date, "SEPT 15, 2004." In response, the screen flashed the words: "PLEASE ENTER MESSAGE."

George carefully composed a tactful message to his latest ladyfriend and entered it. When he had finished, he signed off with his personal ID number and sat back awaiting a response.

As he sat, he thought about his date and the things they might do. He figured that a quiet dinner would be a nice start. But what about after dinner? He drew a blank. Things had been a lot simpler 20 years ago. Back then, you could go to a movie theater or a bowling alley. There had even been miniature golf courses, museums, and art galleries. But not any longer.

The last movie theater had closed its doors about 12 years ago. The demise of the public motion-picture houses had started with cable television. Soon after that, videotape recorders and videodisc systems gave home viewers access to an enormous variety of entertainment. Projection television was around, but it was too expensive to have any great effect on the theaters.

A much more serious blow came when the direct-to-home satellite TV service began. The smaller theaters began to go out of business, but the larger ones managed to hang on...for a while. Then came stereo audio for TV, and videotex. Soon after, the FCC approved the 1125-line, 30-MHz bandwidth television system for use on direct-broadcast satellites. With that system, a television picture looked as good as one projected on a motion-picture screen.

Large-screen, flat-panel TV proved to be the final blow. The first flat-panel units were small; the screen sizes were just a couple of inches across. But a couple of years later, giant-size flat-screen television became available. The first sets were expensive, but it didn't take long for prices to fall. Soon, just about everyone had a huge flat-screen TV in his living room.

George looked at the screen hanging on his wall and recalled the time he'd brought it home. He had been amazed at how easy it had been to set up. After hammering a hook into the wall, the screen was simply hung like a picture. All of the electronics were contained on two IC's so there wasn't even a bulge to reveal where the circuitry was located.

Two years after the introduction of large-screen flat-panel TV, the last movie theater shut its doors. Around the same time, videodiscs containing the works of the world's greatest painters and sculptors began to appear. Barely five years later the last art gallery was gone.

George thought about the other forms of entertainment that no longer existed. Ten years ago, after 3-D television had proven so successful, videodiscs containing three-dimensional images of museum displays were introduced. The last museum shut its doors to the public four years later.

Technology also had a profound effect on other forms of entertainment such as sports. The realism of super-resolution graphics coupled with 3-D television made you feel as though you were right out on a playing field. The last miniature golf courses, bowling alleys, and tennis courts disappeared about seven years ago. It was little wonder that George could think of nowhere to go on his date.

Video today

The preceding scenario is just that—a scenario. It is not an attempt to describe what the future might bring. It is, however, based mostly on products and technologies that do exist today.

Today, the video industry is in the midst of an electronic revolution. Hardly a day passes where a new product or new technology isn't introduced. The research and development labs of many electronics corporations are working continuously in an attempt to keep up with the consumer demand for new products. If it weren't for you, the consumer, the video revolution would not exist.

Economics, according to many experts, is the driving force behind that revolution. Inflation is cutting deeply into everyone's budget. As a result, we are taking fewer vacations and are staying at home more. But we still need to be entertained, and for many, video electronics is the answer.

What does a home video entertainment-center consist of? What products are currently available in the marketplace? What could technology offer if money were no object? Should I buy now or will today's products be outdated in a year or two? This special video-entertainment section will answer those and other questions. But before we describe the individual products that make up a video entertainment-center, we must first discuss its central element the TV receiver, or video-display unit.

Television

Since our entertaiment center is by definition a video center, the central element must be a display device. The most

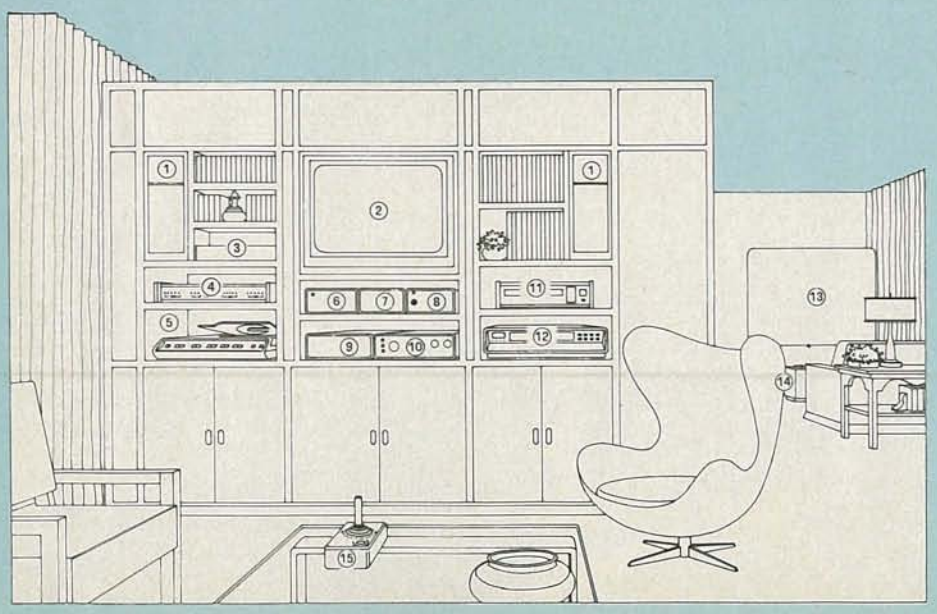

1—Component-TV stereo speakers
2—Component-TV monitor
3—Component-TV receiver
4—Video switcher
5—Videodisc player
6—RF converter
7—Stereo simulator
8—Commercial killer
9—Video stabilizer
10—Image enhancer
11—Satellite-TV receiver
12—VCR
13—Projection-TV screen
14—Projection-TV projector
15—Video-Game controller

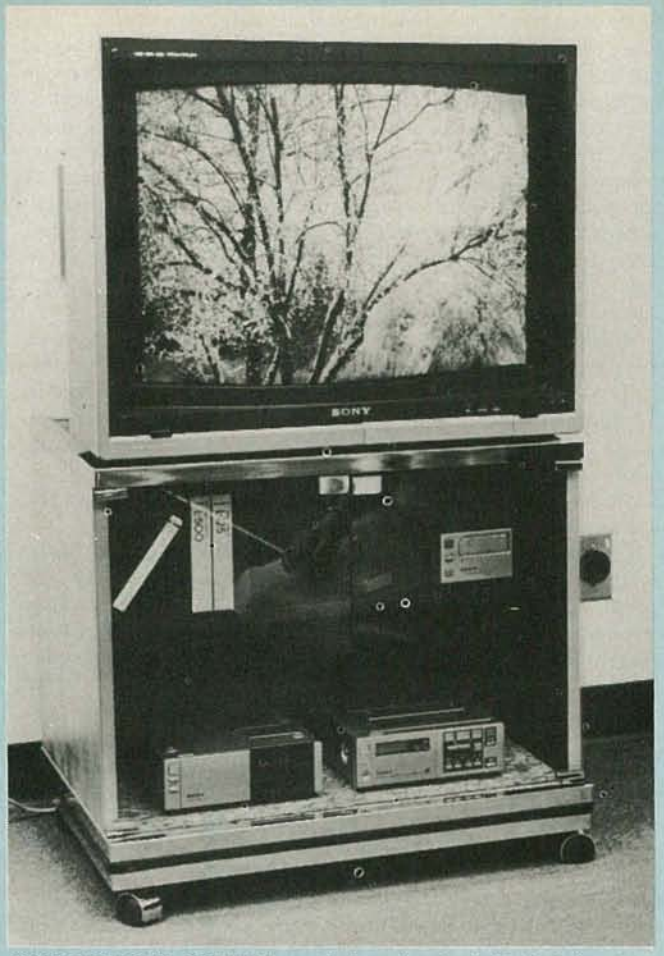

SONY'S *PROFEEL* SYSTEM is one that can be adapted to just about any present or future video need.

commonly available video-display device is, of course, a television set. It provides two important functions in a video entertainment-center. As a receiver, it supplies the standard video-programming available from broadcasters. When connected to a pay-TV cable service or a satellite-TV earth station, the amount of programming available to a viewer increases tremendously...to say the least. The second function of a TV set is to display the outputs of VCR's, videodisc players, and video games.

Unfortunately, a television set is not the ideal display device for a video entertainment-center. In most cases, to input a video signal to a TV set, you must first modulate an RF carrier with that signal and feed it to the set's antenna terminals. The "receiver" circuitry in the TV then demodulates the RF signal, extracting the video, which is then displayed on the screen. That video-RF-video conversion results in a degradation of resolution and an increase in the "noise" seen in the picture.

As a broadcast receiver, today's TV set has about reached its performance limit. The performance of today's top-of-the-line TV set is limited primarily by the NTSC broadcast-standard rather than by technology. If you look at the improvements made in TV sets over the last several years, you'll discover that primarily they involve convenience features rather than performance. Aside from a total abandonment of the present NTSC standards (highly unlikely, if not impossible), the future will not offer TV sets with greatly improved performance. What you see today is pretty much the same as what you'll see tomorrow.

What will the future bring? TV receivers with more features, as well as receivers that will integrate easily into video entertainment-centers and take full advantage of all the video signals available. For example, there are TV sets currently available that have video-input jacks and therefore avoid the awkward video-RF-video conversion that would otherwise be necessary.

Unfortunately, the features offered by today's top-of-the-line TV set are really inadequate when you consider that the set will be the *heart* of a video entertainment-center. On the horizon lie videotex, two-channel audio, and direct-to-home satellite-TV service (called DBS); all are current proposals before the FCC. What will happen when each of those proposals is adopted? (Eventually, they all will be.) Each of those services will require its own decoder and/or converter box. As a consumer, will you place a box on top of a box on top of *another* box? (And that's in addition to the decoders and converters necessary for receiving cable or pay-TV!)

Matsushita has developed a circuit that will automatically cancel ghosts in a TV picture. They have also developed a system for broadcasting three-dimensional TV pictures; both are being offered to manufacturers through licensing agreements. When those are available in the stores, will you be forced to trade in your TV set?

If we consider a TV set as part of an overall video entertainment-center, then we must take into account *all* the devices and signals that it will be handling.

Let's take video games for example: The resolution and complexity of video games has increased dramatically over the past couple of years. In fact, the resolution of some of today's video games is limited not by the game-manufacturer's technology but by the resolution of the video circuitry in today's color-TV sets. And the resolution (video bandwidth) of today's color TV sets is limited primarily by the NTSC standards. The video-input jack gets around the video-RF-video conversion problems, but there's no getting around the problem of resolution. That same situation exists when you use a TV set as a display device for a home computer.

Component television

Since a television receiver serves as both a receiver *and* a display device in a video entertainment-center, why not separate the two functions? The receiver circuits could be packaged separately and a wide-bandwidth, high-resolution video monitor could be used as the display device. That would let us feed the video signals from other devices within our entertainment center *directly* to the video monitor, and avoid the degradation in quality that would take place if the receiver circuits were used. Systems using that approach, which is called component television, are sold in this country by Sony (9 West 57th Street, New York, NY 10019) and Teknika (1633 Broadway, New York, NY 10019).

Ideally, a component television-system would contain a color video-monitor with a video bandwidth of around 12 to 15 MHz. That contrasts with today's top-of-the-line color receivers that offer a video bandwidth of around 4.5 MHz (at best). Since the receiver circuitry is separate, we could feed video signals directly to the video monitor for display. Those signals could come from a videodisc player, videocassette recorder, satellite-TV receiver, videotex decoder, one or more video games, a home computer, or other devices that eventually will be developed. The high resolution of the video monitor insures high-quality reproduction from all currently available devices, and from devices that will become available in the future.

Packaging the receiver circuitry separately offers some additional advantages. At any time, the receiver portion can be upgraded or replaced without incurring anywhere near the expense of replacing a complete television set. If the "component" philosophy is carried even further, the receiver itself can be packaged into separate modules; i.e., the tuner, IF strip, video detector and amplifier, audio detector and amplifier, etc. That additional flexibility would permit, for instance, the tuner to be upgraded without replacing the entire receiver. Also, with that approach—or perhaps by designing a receiver that can accept modules—the receiver could be eas-

TEKNIKA'S ATV-19 is a component video-system that foreshadows things to come.

ily modified to handle videotex, two-channel audio, etc., as they became available.

What's available

Unfortunately, all of the flexibility and performance that could be provided by a component television system are not offered by either the Sony or Teknika systems. They are, however, a step in the right direction. Let's take a look at each of them.

Sony's component television system is called *Profeel* and it should be available by the time you read this. Two color video-monitors are available, the *KX-2501* 25-inch monitor and the *KX-1901* 19-inch monitor. Although Sony does not publish any bandwidth specifications for their monitors, they do publish a resolution specification. The resolution is quoted as better than 340 horizontal lines for the *KX-1901* and better than 350 horizontal lines for the *KX-2501*. That specification relates to the ability of the monitor to display a video *test* pattern. Sony also states that its monitors, using a special *Trinitron* CRT, are capable of displaying text with 80 characters-per-line. That again contrasts with a conventional TV, which can display only about 40 characters-per-line clearly enough to be read.

Based on that information, we could assume that the Sony monitors have a video bandwidth twice that of a conventional TV or around 8 MHz. Is 8 MHz wide enough? Yes and no; the Sony monitors will display just about any video signal you can feed to them today, with the exception of very-high-density computer graphics. Depending on what the future may bring, the 8-MHz bandwidth may suffice. However, since the component television approach should cushion a consumer against future video breakthroughs, a 12 or 15-MHz monitor would provide a more comfortable margin.

The *Profeel* monitors will accept both a composite video signal as well as digital RGB (*R*ed-*G*reen-*B*lue) signal. A composite video signal consists of the video information, the sync and blanking pulses, and color information. No RF carrier is used. That signal is governed by the NTSC standards and all the inherent limitations still apply. The ideal way, though, to display a video signal is by feeding the monitor with separate red, green and blue signals. Those signals are amplified by the monitor and are used to drive the red, green, and blue electron guns directly.

Unfortunately, only *professional* video equipment provides RGB outputs. Consumer equipment, with the exception of a few super-high-resolution computer graphic-display boards, provides an NTSC composite-video signal. That includes such equipment as video games, videodisc systems, videocassette recorders, and video cameras. We can hope that manufacturers will start providing RGB outputs on their video products in the near future. The *Profeel* video monitors will accept RGB signals that are *digital*. In other words, they will accept the output from a computer graphics-board or a video game (when video games with RGB outputs become available), but not the analog signals from a video camera, videodisc player, or videocassette recorder.

The receiver package is called the *VTX-1000R Profeel Access Tuner*. It is a table-top unit that measures 4¾ × 1 × 5⅝ inches. The tuner is frequency synthesized and can tune the VHF and UHF channels, as well as the midband and superband cable-TV channels. In addition to multiple video and audio inputs and outputs, the receiver offers features such as a back-panel slide switch that selects between intercarrier and split-carrier sound demodulation.

Channel selection is accomplished either randomly, using a 10-button keypad, orr sequentially. Separate bass and treble controls, as well as a loudness switch, stereo-balance control, and headphone-level control are included. Front-panel switches select either the TV tuner or up to three video sources. Another switch selects either the antenna or an auxiliary RF-source of the tuner.

The rear panel contains three auxiliary 75-ohm composite video and stereo-audio inputs. A set of 300-ohm UHF antenna terminals plus a 75-ohm VHF antenna jack is provided. In addition, a separate auxiliary 75-ohm VHF input, and an output labelled "TO CONVERTER" are provided. In a standard cable-TV hookup, the cable would be connected to the 75-ohm antenna jack. The TV tuner is capable of tuning the cable stations directly using the front-panel channel selection buttons or the optional remote control. If a cable-TV program is encoded (scrambled), the decoder can be connected to the AUX and TO CONVERTER jacks. Then, by selecting the auxiliary antenna using the front panel or remote control, the cable (attached to the antenna input-jack) would be internally connected to the TO CONVERTER jack. The output of the converter would be connected to the auxiliary antenna-input. The advantage would be that by leaving the cable decoder set to the encoded channel, you could watch the encoded channel just by selecting the auxiliary antenna and tuning the receiver to the output of the decoder, all via the remote control.

The rear panel of the *Profeel VTX-100R* receiver also provides output jacks for two monitors. One of them could feed a video monitor and the other a projection TV set. Each set of output jacks consists of a composite-video output jack and stereo-audio output jacks. In addition, the rear panel provides a multiplex TV-sound output-jack to drive a stereo decoder when stereo TV-sound is approved for broadcast. The audio-output jacks from the receiver are connected to a 5-watts-per-channel stereo amplifier housed within the video monitor.

Overall, the *Profeel* component television system comes close to the ideal. It is flexible and offers better performance than can be obtained with a conventional TV. The only shortcomings are the somewhat limited bandwidth of the video monitor, and the fact that the receiver could have been even more flexible if it were a modular design.

While the Sony *Profeel* system comes close to being the ideal heart for a video entertainment-center, Teknika's *ATV* system falls short, basically because Teknika chose to produce a combination audio/video system rather than a high-quality video system. Teknika's *ATV-M19* video monitor has a video bandwidth of only 3.0 MHz. The *ATV-R* receiver combines a 105-channel TV tuner, FM stereo tuner, and a 10-watt-per-channel stereo amplifier. While such a system will fill the needs of many customers, it is one that your video entertainment-system may outgrow. And, as we've seen, home video's potential for growth is enormous. **R-E**

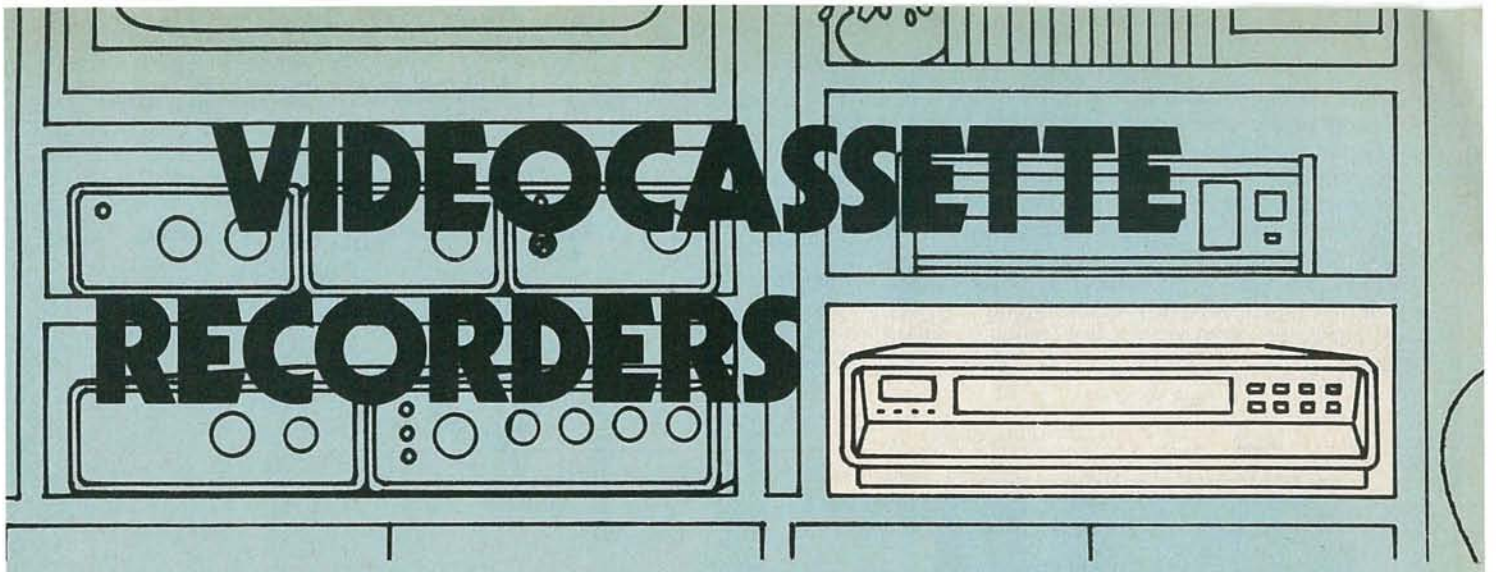

VIDEOCASSETTE RECORDERS

The past five years have seen home video cassette-recorders evolve at an incredible rate. Let's bring you up to date on where we stand today, and on what we may see in the future.

LEN FELDMAN
CONTRIBUTING EDITOR

THE MODERN VIDEO CASSETTE-RECORDER (VCR), VINTAGE 1981-82, is a far cry from the first *Betamax* machines introduced into this country by Sony in early 1976, or even from the first VHS-format recorders introduced a year or so later by JVC Company and by its sister company, Panasonic (the trade name used by Matsushita Electric Company of Japan).

To begin with, today's prospective purchaser has at least two tape formats from which to choose, and it is possible that within the near future there will be several more formats available. First-generation VCR's featured mechanically-actuated tape-transport mechanisms, not unlike the "piano key" systems found on audio cassette-recorders. Almost all of today's VCR's, however, are operated by feather-touch electrical switches that control transport operation electronically and protect both the tape and the machine from human error. And, while first-generation machines could be programmed for only a single recording session in a single 24-hour period, modern programmable VCR's can be programmed for days and weeks ahead, and are able to switch channels between programs, working from instructions stored in their microprocessor memories. All of that is in addition to a greatly extended recording-time capability, which has gone from one hour (on the early *Beta-I* format VCR's) to five or six hours on a single cassette.

An overview of the formats

Sony's Beta system was first introduced in late 1975. It uses a plastic, two-hub cassette that measures 6.1 × 3.8 × 1 inches. The earliest Beta cassettes contained about 500 feet of ½-inch video tape, which, at a running speed of 1½ inches-per-second (a speed referred to as X-1 or Beta I) provided only one hour of recording time. Beta-format machines sold today use the slower tape speeds of *Beta II* (0.79 inches-per-second) and *Beta III* (0.53 inches-per-second), for longer play/record times. Using an L-830 Beta cassette, it is now possible to extend recording time to a full five hours.

About a year after Sony introduced the *Betamax* system, Japan Victor Company (known as JVC in this country) introduced its *VHS* (*V*ideo *H*ome *S*ystem) VCR's. While theirs is similar to Sony's format in many respects, there are several differences between the two systems that make them incompatible. (Beta tapes cannot be played on VHS machines and vice versa.) To begin with, the cassette used in VHS recorders is somewhat larger than that used in Beta machines—7.4 × 4.1 × 1 inches.

VHS cassettes are identified in terms of their playing time. Using the original VHS speed of 1.31 inches-per-second, a T-120 cassette contains enough tape for about two hours (120 minutes) of recording or playback. But the designers of VHS were not about to be outdone by Sony's longer-playing Beta speeds, so in mid-1979, makers of VHS machines (who by then outnumbered those making Beta machines under Sony license) slowed down their tape speeds to create four-hour (LP) and six-hour (ELP) tape speeds, which is where matters stand today. Table 1 shows speeds and recording time for the various Beta and VHS formats now available.

How they work

Considering how difficult it is to maintain "flat" frequency response in an audio tape recorder from 20 Hz to "only" 20,000 Hz, it seems almost miraculous that VCR's can handle the incredibly wide bandwidths associated with a video signal. The trick, of course, is that the actual head-to-tape speed is really hundreds of times greater than the slow linear speed of the videotape.

Record and playback tape heads, in both VHS and Beta format machines, are mounted on a spinning drum or head that rotates at exactly 1800 rpm. That works out to 30 revolutions-per-second, or the exact number of video frames-per-second used in the NTSC TV-system broadcast in this country (and in Japan). Since there are two heads mounted 180° apart on the spinning drum of either type of machine, two fields are scanned for each revolution of the drum. The original track format for professional helical-scanning VCR's was standardized by the EIAJ (*E*lectronic *I*ndustries *A*ssociation of *J*apan) some time ago, and is shown in Fig. 1. Note that there is a space, or guard band, between adjacent tracks. The ability of both the VHS and Beta machines to do away with those guard bands, as shown in Fig. 2, is one of the reasons why such an incredible density of signal information

TABLE 1

Format	Tape speed (ips)	Maximum record/play time (hours)
Beta I	1.57	1.7
Beta II	0.79	3.3
Beta III	0.53	5
VHS SP	1.31	2
VHS LP	0.66	4
VHS ELP or SLP	0.44	6

can be accommodated by the new machines.

Another aspect of home video recorders that has not been sufficiently emphasized is the fact that video signals are recorded as frequency-modulated signals (audio-only recorders use amplitude modulation). FM is used for a number of reasons. For one thing, FM systems can ignore amplitude variations in playback signals. Secondly, because FM signals are sensitive to changes in frequency and not amplitude, the tape can be driven into saturation safely during signal peaks. In addition, because amplitude distortion can be ignored in an FM system, there is no need for the high-frequency bias signals that are normally added in audio recording. Finally, the DC component of the TV signal—a value that changes slowly with overall scene brightness—is never lost in an FM system; it *can* get lost in an AM system.

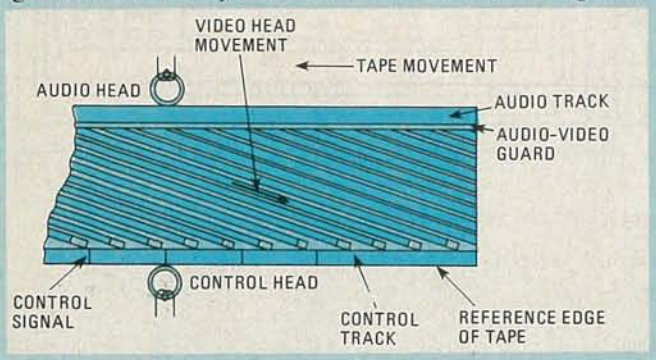

FIG. 1—HELICAL SCANNING uses rapidly rotating recording heads to achieve high packing-density of video information at slow linear tape-speeds Note guard bands between video tracks as called for by original EIAJ standard.

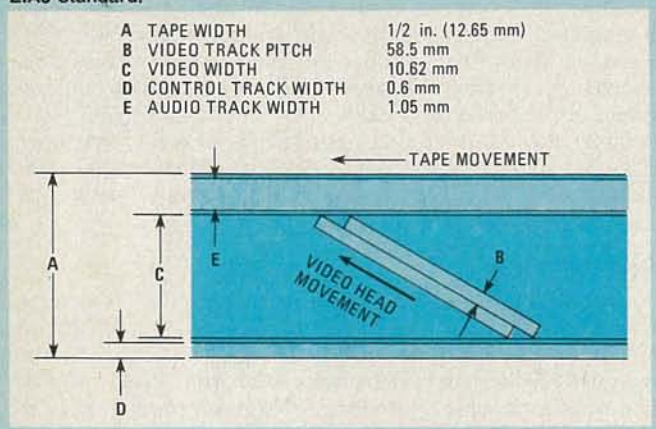

FIG. 2—BETA AND VHS FORMATS do away with guard bands by recording adjacent tracks at different azimuths. That helps to eliminate crosstalk.

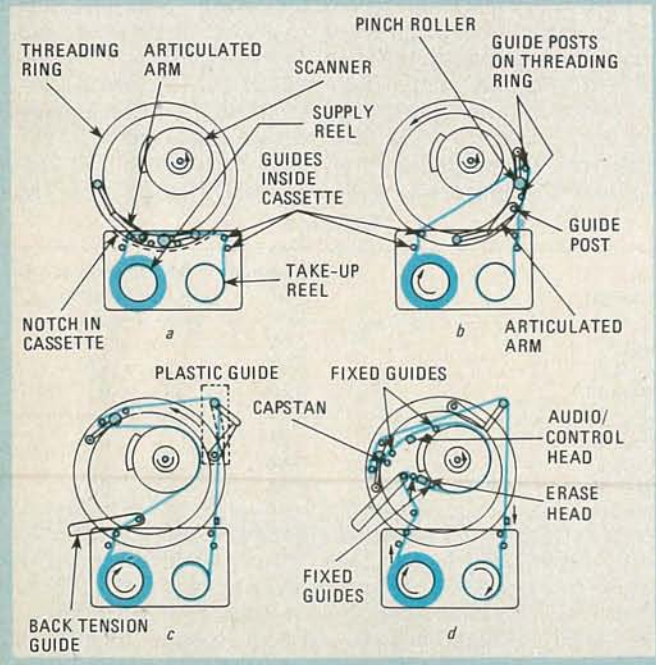

FIG. 3—DETAILS OF BETA THREADING PROCESS. Note resemblance of tape path to a sideways Greek letter omega (Ω) in *d*.

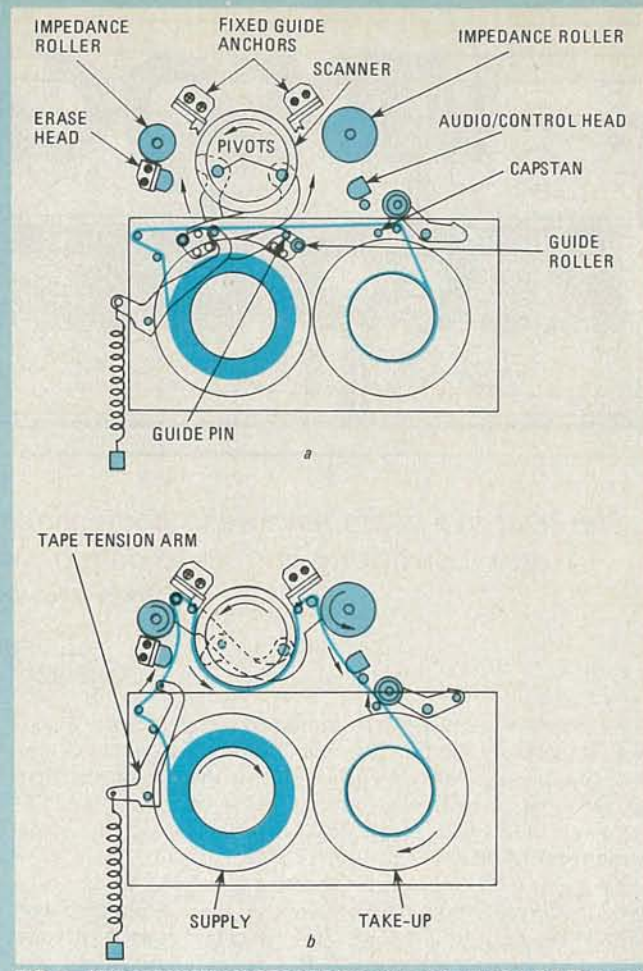

FIG. 4—VHS MECHANISM BEFORE threading (*a*) and after (*b*). Tape path resembles letter "M."

In addition to certain minor differences in the makeup of the video signal to be recorded (Beta uses a 688-kHz heterodyned color-subcarrier, while VHS uses a color-subcarrier frequency of 629 kHz), a different approach is taken in the designs of the *Betamax* and *VHS* tape-threading mechanisms. In the Beta system, a loop of tape is drawn around the scanning drum and the entrance and exit guides are in fixed locations. Figures 3-a through 3-d show the step-by-step threading arrangement used in the Beta system.

The VHS system uses moveable entrance and exit guides in a much simpler and faster threading operation. The moveable guides are locked in place against fixed anchors after they reach their final position, as illustrated in Figs. 4-a and 4-b. Since, in the VHS system, the threaded tape resembles the letter "M" (see Fig. 4-b), this system is sometimes referred to as "M-loading" or "M-threading," whereas the Beta system is sometimes referred to as "omega-wrap," due to the threaded tape's resemblance to the Greek letter "omega" (Ω), as can be seen in Fig. 3-d.

Another distinction lies in the fact that in the Beta system, tape threading starts as soon as the cassette is dropped into position, so that tape is ready for playing or recording when appropriate transport buttons are depressed. In the case of VHS, threading only begins when the play or record buttons are depressed, which accounts for the somewhat longer delay between the time you press those buttons and the time recording or playback actually begins.

The Technicolor A/V system

Just about one year ago, Technicolor Audio-Visual startled

the video world with the introduction of another VCR format—the smallest and lightest yet available. This new miniaturized VCR, shown in Fig. 5, uses a new-type cassette containing quarter-inch tape. Figure 6 shows just how small the new cassette package is; almost as small as an ordinary compact audio-cassette. The new Technicolor VCR is the result of a joint effort between Technicolor Audio-Visual and Funai Electric Trading Company Ltd. of Japan. Funai, a manufacturer of electronic equipment for major American companies, initiated the development of what has come to be known as the *Micro Helical System*, and Technicolor engineers joined forces with Funai more than two years ago to launch the project commercially.

Much like Beta and VHS systems, the Technicolor system uses two rotary heads and helical scanning, as well as frequency modulation for applying the signal to the tape. Linear tape speed is 1.26 inches-per-second and tape width is ¼ inch. The cassette package measures only 4⅛ × 2⅝ inches and weighs only 1.78 ounces, compared with the approximate half-pound weight of the two standard-sized Beta and VHS cassettes. The battery operated VCR weighs only 7 pounds (including the battery) and uses only 8 watts when recording. Technicolor is adding products to the line, among them a camera, a matching tuner and, most recently, a product called the *Video Showcase*—an all-in-one VHF/UHV portable color-TV set that includes a videocassette recorder and a tuner for recording TV programs. The entire unit weighs 21 pounds and measures 18 × 13 × 8½ inches. It operates on AC current, car/boat battery, or from its own rechargeable battery.

Maximum recording time for the Technicolor system was initially 30 minutes, but the company has now developed a cassette containing one hour's worth of tape. Because of its time limitations, it is felt by many that the Technicolor system will lend itself best to videotaping using a camera rather than for recording TV programs "off-the-air". Business applications (visual memos, easily mailed from one location to another) are also envisioned.

Much to everyone's surprise, at last summer's Consumer Electronics Show in Chicago, the well known Canon Company, best known for its photographic products, introduced its own version of the *Micro Helical* VCR system. It appeared identical to the Technicolor system and compatible with it.

Another entry

Equally surprising was an announcement from Grundig, the well known West German electronics firm, that it was going to promote a new version of the *Video 2000* system, developed jointly with Philips of the Netherlands. That video-recorder system is widely used throughout Europe; but because it has been confined to PAL and SECAM standards, it has never made any inroads in the U.S. The heart of the new VCR system is a flat cassette, measuring 7.2 × 4.3 × 1.0 inches and designed as a flip-over unit which, like audio cassettes, can be played on both sides. Despite a reduction in tape length, playing time is double that of Beta II or VHS LP, or twice four hours. As shown in Fig. 7, video-track width is set at 0.018 mm and only half the width of ½-inch tape is used for recording. The arrangement permits the use of a higher linear tape speed for improved sound quality. With the *Video 2000* system, tape usage is only 87.9 meters-per-hour, which is about 52% less than for the two standard video systems. The 0.65-mm wide audio track has been designed to accommodate either mono or stereo (two-channel) sound.

To insure best picture quality and interchangeability of tapes from one *Video 2000* machine to the next, the usual tape servo-control has been replaced by a new type of tracking system which Grundig calls *Dynamic Track Following* or *DTF*. In that system, if any track deviations occur, the positions of the two video heads on the headwheel are adjusted by piezoelectric strips so that the full width of the video track is covered and the full level of the scanned signal

FIG. 5—NEW LIGHTWEIGHT PORTABLE VCR from Technicolor.

FIG. 6—VIDEOCASSETTE FOR Technicolor systems uses ¼-inch tape and is barely larger than standard Philips audio cassette.

is retained. In addition, a control signal is derived which effectively regulates the tape transport and makes a manual track-control unnecessary.

The dynamic track-following system permits perfect playback of freeze-frame, slow-motion and speeded up "search" video. The principle of the *DTF* system is shown in Fig. 8.

The first unit employing that new format to be introduced in this country by Grundig is known as the *Video 2×4 Super*, and is shown in Fig. 9. The display seen at the left of the unit's front panel gives program timing-information and also displays error messages (the message "CASS" seen in Fig. 9 indicates that the cassette has not been fully or properly inserted).

Video frequency-response claimed for the unit is 3 MHz at −6 dB; audio response is from 40 Hz to 10 kHz. Forward and backward picture search are possible at 7× and 5× normal speed, respectively. An automatic program-finding feature locates the start of any new program, while a dynamic noise-suppression system in the audio circuitry is said to improve the audio signal-to-noise ratio by 8 dB, to an excellent 52 dB.

Despite all its superb features and advantages, it is difficult to imagine that still another VCR format can capture a significant market share, when Beta and VHS have already been so well accepted in this country and when there is so much software, in the form of pre-recorded videocassettes available only in those two formats.

As for overall dominance in the U.S. market, VHS is the clear leader at the moment, with about 70% of all new VCR's being sold using that format. Beta accounts for just about all of the remaining 30%, because the Technicolor portable format is still too new to have captured a measurable percentage of sales.

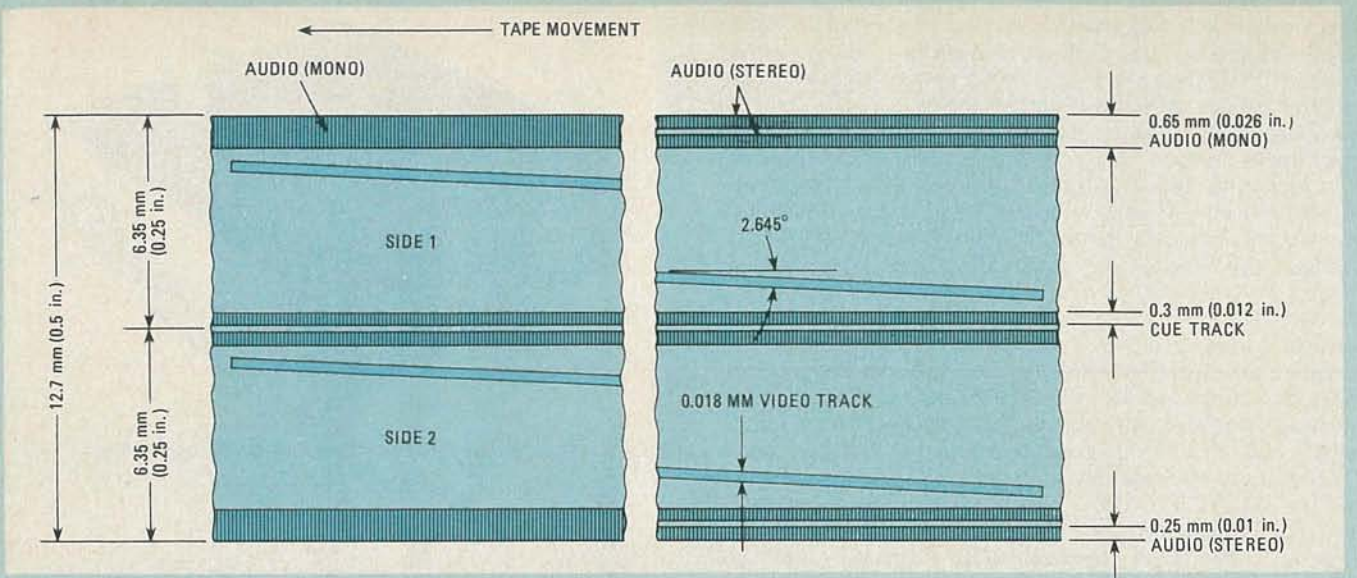

FIG. 7—THIRD VCR FORMAT, *Video 2000*, from Grundig, uses ½-inch tape, but only half the width of the tape is used at a time. Cassette is flipped over (like its audio counterpart) to make use of other half.

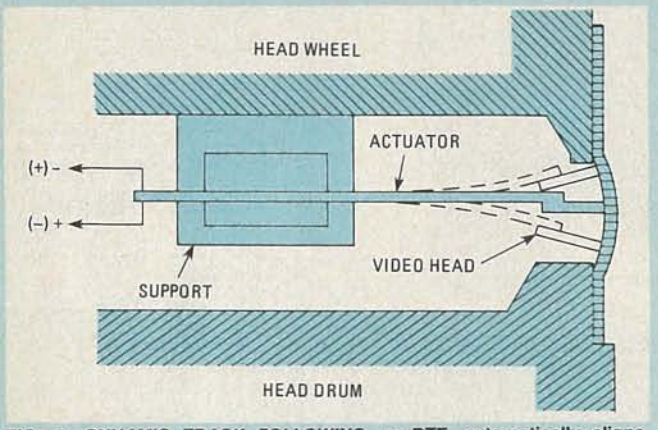

FIG. 8—*DYNAMIC TRACK FOLLOWING*, or DTF, automatically aligns positions of video heads for best tracking.

FIG. 9—U.S. VERSION of *Video 2000* system, Grundig's *Video 2×4*.

FIG. 10—AKAI'S *VPS-7350* system features stereo-sound capability.

Who makes which?

Of the two major VCR formats (VHS and Beta), VHS is supported by many more manufacturers than Beta. Included in the VHS group are JVC (the originator of the system), Akai, General Electric, Hitachi, N.A.P. Consumer Electronics (Magnavox/Philco/Sylvania), Mitsubishi, Panasonic, Quasar, RCA, and Sharp. Manufacturers making or supplying Beta-format machines include Sony (the developer of that format) Sanyo, Sears, Toshiba, and Zenith.

Update on portable VCR's

About the only thing "portable" about the first portable VCR's was that they could operate from battery power and did not have to be tied to an AC outlet. Furthermore, their programming capabilities were highly limited, and they generally had only a single tape-speed. Now all that has changed as the new generation of portables becomes as fully sophisticated as the latest home units.

For example, consider Akai's *VPS-7350* system, shown in Fig. 10. This modular system features a lightweight VCR unit *(VP-7350)* for both portable and home use, and a tuner/timer *(VU-7350)* capable of recording six events over seven days from any TV channel. The system has both two-hour and six-hour capabilities. Its two audio channels allow the user to add stereo sound to video recordings, or to record directly in stereo if a TV program is being simulcast over an FM-stereo radio station. And, of course, when stereo sound is finally broadcast over TV in the future, the unit will be ready for it. Complete remote control allows all special features (including double-speed playback, and variable-speed playback ranging from still-frame to four-times-normal speed) to be controlled from across the room. The combination also features "program-location search"—a fast-forward mechanism that searches and then stops at any point where there is no video (presumably on the assumption that video will follow).

The companion *VU-7350* tuner/timer transforms the portable VP-7350 recorder into a full-function home VCR that can be programmed to record off-the-air. A fail-safe power-guard system prevents the loss of programmed instructions in the event of a power interruption.

Beta-format portable VCR's have not lagged behind either, as witnessed by Sanyo's new lightweight (8¾ pounds) *model VRP-4800*. Features include full-function remote operation from the optional *VSC-450* color video camera; Sanyo's *Betascan* high-speed search system that locates programs at nine times normal playback speed; a freeze-frame function, with frame-by-frame advance; feather-touch controls, and two-speed operation (Beta II and Beta III) for up to five hours of recording capability.

A compact tuner/timer with all-electronic varactor tuning and seven-day programmability, *model VTT-481* is available

FIG. 11—JVC's *HR-2200U* has an edit-start control to eliminate noise or gaps between scenes.

FIG. 12—SONY's *SL-5800* uses a double-azimuth head to provide noise-free slow and freeze motion.

FIG. 13—FOUR HEADS ARE USED in JVC's *HR-7300-U*. One set is used in two-hour mode, the other in six-hour mode.

as an option to match the portable VCR. The VCR has a suggested retail price of just under $1200.00, while the matching tuner/timer will sell for around $350.00. The prices are typical of those being assigned to the new VCR and tuner/timer units.

JVC's earliest portable VCR was a rather heavy unit that had no special capabilities and only the standard play (SP) two-hour tape speed. The company's latest portable, the *HR-2200*, weighs a mere 11.4 pounds (including battery pack) and consumes only 9.6 watts when operating. Further power saving is possible using a RECORD/STANDBY switch that switches power off while still allowing a smooth transition between separately recorded scenes. As is obvious from Fig. 11, the supplied remote-control unit includes the capability for slow-motion playback (variable from 1/6 to 1/30 normal speed), freeze-frame, and frame-by-frame advance. A feature called ESC (*E*dit *S*tart *C*ontrol) automatically aligns the start of the segment being recorded with the end of the previously recorded one to eliminate noise or gaps between scenes. There is also a shuttle-search feature that allows you to run the tape in either direction at about 10-times-normal speed while watching the picture on a TV set to locate a desired program segment. All that, and portability too!

Progress in home VCR's, too

The video consumer benefits from the fact that there are two major systems competing with each other for a share of the market. For, as the Beta people come up with something new, the VHS-supporting companies feel compelled to come up with the same feature, or even an advanced variation of it, for their own machines.

Sony's latest home-model *Betamax* unit, the *SL-5800*, shown in Fig. 12, is a good example of that trend. An outstanding feature of this model is *Variable BetaScan*—a new type of *Betascan* that permits backward and forward picture-search at any rate from 5 to 20 times normal speed with a single control-knob on the accompanying remote-control unit. Programmability covers four events over a 14-day period. The *SL-5800* is also equipped with a newly developed double-azimuth video head (see the May 1981 issue of **Radio-Electronics,** page 56) that provides improved freeze-frame, frame-by-frame picture advance and variable-speed slow motion (from "stop" to ⅓ normal speed). With the new heads, the TV screen can show a stationary picture with virtually no noise bars. It's almost as if Sony were anticipating the Grundig/Philips introduction discussed above.

JVC's latest home VCR, the *model HR-7300U* (Fig. 13), records in two-hour and six-hour modes but can play back tapes made in 2, 4, or 6-hour modes. One of the ten functions available from the remote-control unit is seven-times-normal-speed shuttle search for locating specific portions of a tape. Shuttle search increases to 21-times-normal playback speed in the six-hour extended-play (EP) mode. The VCR can be programmed for eight events over a two week period. Another innovation included in this machine, though not apparent from the outside, is a four-head system. One set of heads is used for the two-hour mode, while a separate set of heads, optimized for a slower tape speed, is used in the six-hour record/play mode.

Not to be outdone, Toshiba, which manufactures Beta-format units, has incorporated four heads into its newest home-VCR, the *V-8500*. The two extra heads added in this case are designed specifically to provide clear images in the pause/still and variable-slow-motion functions. Circuitry in the additional heads eliminates noise and flickering on the screen. Other special features include visual scanning at 40 times normal speed, visual *Betascan* at 17 times normal speed, and a visual double-speed function. The full-function remote hand-held control offers visual forward, rewind, pause/still, two-times-visual fast-forward, frame-by-frame forward, and variable slow motion. The *V-8500* has a suggested retail price of $1495.00 and is programmable for up to eight different events over a two-week period.

While we have mentioned only a few Beta and VHS machines by actual brand and model number, it should be clear from those descriptions that the difference in the features offered by Beta and VHS machines are fewer and fewer, as the maker of each type of machine attempts to be competitive in a growing market. Our own experience with a number of both Beta and VHS machines indicates that either type is capable of delivering a quite acceptable color picture from ½-inch videotape cassettes, and I suspect that both the Beta and VHS formats will survive for many years to come. As to whether any of the newer formats will find acceptance in the home or portable VCR field, only time will tell. **R-E**

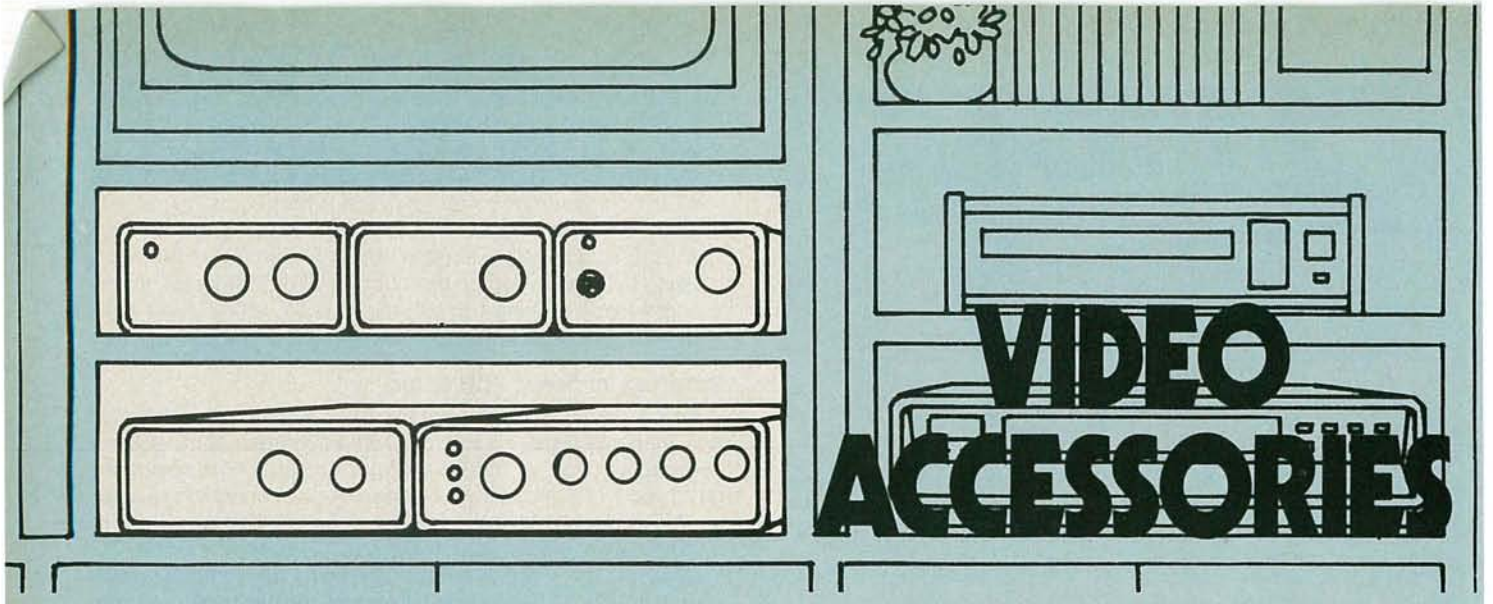

It takes more than a VCR to make a quality home-video system. Here's a lineup of products that will help you get the most out of your equipment.

LEN FELDMAN
CONTRIBUTING EDITOR

WHEN YOU CONSIDER THAT THE FIRST HOME VIDEOCASSETTE recorders went on sale in 1976, it is amazing how many accessories, or "video black-boxes," have appeared in the past five years as add-ons for the three million or so VCR's that are currently in use. Equally amazing is that, while no VCR's are actually produced by U.S. companies (even those bearing familiar domestic brand-names are manufactured under subcontract by two or three overseas companies), with few exceptions just about *all* of the video accessories we will be discussing here come from relatively small *U.S.* firms.

Video accessories fall into four basic categories. There are signal switch-boxes, which simplify the problem of connecting a number of video devices without creating a "rat's nest" of cables. There are signal enhancers or modifers of one kind or another. The third category of accessories is the signal stabilizers. And, finally, we have a whole assortment of video-care products which, though not necessarily "black boxes," certainly qualify as video accessories.

Video switchers

With so many things available to connect to your TV set, it's not surprising that some manufacturers have come up with video switch-boxes. The main feature of those boxes is that they provide a convenient way to connect all your accessories (for expample, a video game, a VCR, and a video disc player) to your TV set, and provide a convenient way to select the accessory you wish to use.

Those boxes can also be very useful for cable-TV subscribers. Often, cable services require the use of a channel selector or cable switch-box supplied by the cable company. Since the output of the cable switch-box is usually on a specific channel, and must be connected to your TV set's antenna-terminals, one of the most important and useful features of a videocassette recorder is defeated—the ability to watch one TV program while recording another. That is impossible when such cable switch-boxes are used, since all channel-selection is made there, and not at your TV set or the tuner of your VCR.

A solution to that problem is one of the many switchers and selectors now on the market. We will use a well-known switcher. Beta Video's *Distrivid*, to illustrate how such devices work. The *Distrivid* uses a series of interlocking front-panel pushbuttons to allow you to record from one to three RF sources, and to view one of any of four sources on one or two TV sets simultaneously. Alternatively, you can record

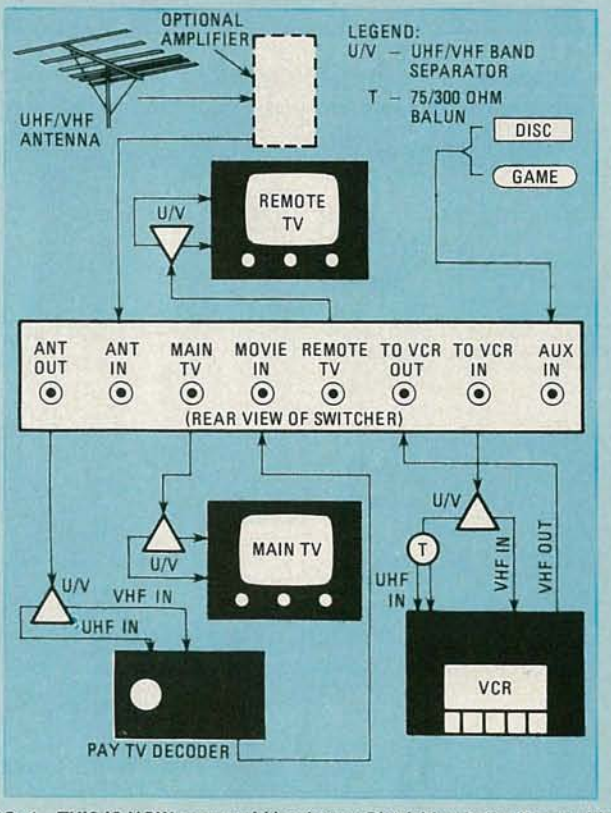

FIG. 1—THIS IS HOW you would hook-up a *Distrivid* switcher if your video system included an over-the-air pay-TV decoder.

from any one of four sources on two VCR's and view any of three sources on a single TV set; the combinations are almost limitless. Figure 1 shows how you could hook up to the *Distrivid* if you subscribe to an over-the-air pay-TV service; Fig. 2 shows a typical cable-TV hookup. The *Distrivid (model IC-28)* has a suggested retail price of just under $200.00. Beta video also manufactures a smaller, less versatile unit, the *Disc-Switch (model IC-08)*, that sells for around $60.00.

A somewhat simpler switcher is the *VideoMate model VM-601*, manufactured by Total Video Supply Company. That small unit, which has a suggested list price of $89.95, is

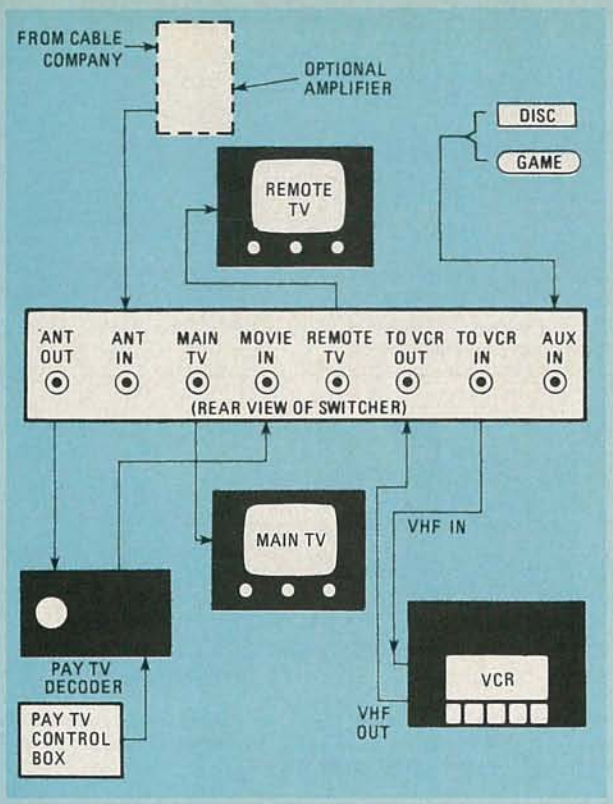

FIG. 2—CABLE-TV SUBSCRIBERS would set up their home-video system as shown here. The switcher allows you to hook up cable TV, pay TV, a VCR, and either a videodisc player or a video game while avoiding a "rat's nest" of wires and the accompanying problems.

FIG. 3—A SOMEWHAT SIMPLER SWITCHER, the *Videomate model VM-601* from Total Video Supply Company still lets you switch to two or three video sources.

shown in Fig. 3; it offers six selectable RF inputs and one RF output. Cable-TV subscribers, however, would be better off with the more elaborate *VideoMate model VM-600*, shown in Fig. 4. That unit sells for around $120.00, but it allows you to record from one video source while watching another.

Signal enhances and modifiers

Whether you buy prerecorded videotapes, record your own programs off-the-air, or make your own videotapes using a video camera, there have probably been times when you wished you could have gotten a picture with better definition. If you copy tapes, you have probably noticed some deterioration in picture quality on those tapes when they were compared with the original. If you view the tape on a large screen or projection television, the lack of sharpness and detail is even more apparent.

There are several products now available that, to a greater or lesser degree, can improve the apparent sharpness or resolution of both off-the-air recordings and of tape copies. Two such products are the *Detailer I* and the *Detailer II* from

FIG. 4—FOR MORE DEMANDING SITUATIONS, the *Videomate VM-600* allows you to record broadcast-TV while watching your subscription channel.

FIG. 5—SIGNAL ENHANCERS, such as the *Detailer II* from Vidicraft improve the apparent sharpness and resolution of either off-the-air recordings or tape copies.

Vidicraft Incorporated. Both models, in addition to improving the quality of original recordings and tape playbacks by increasing detail and sharpness, include a distribution amplifier that provides multiple video-outputs without any losses in signal levels.

The *Detailer I* is the less expensive of the two models (at a suggested retail price of $140) and performs very much like the *Detailer II* when copying good master tapes or making original recordings. It is less effective dealing with multi-generation tapes (tapes that are many copies removed from the original) or black-and-white video material. The device features three video outputs so that it can be used for making up to three copies at once.

The *Detailer II* (with a suggested retail price of $295.00) is more versatile, and has several additional features; it is shown in Fig. 5. It has separate DETAIL and SHARPNESS controls, and can improve picture quality even when copying multi-generation tapes. A MODE switch provides a BYPASS function that can be used for making comparisons between the signal coming off the original tape and the one that's been processed. Also included is a COLOR position for color-signal enhancement, and a MONO switch position for black-and-white signal enhancement. The unit has three switchable video/audio inputs and four outputs; they allow up to four VCR's to be permanently interconnected. Three of the VCR's can be used either as master or slave machines without changing the cable connections.

It should be noted that image enhancers such as the *Detailer I* and *Detailer II* process video only—not audio. Their use requires either a second VCR or a TV set modified to accept a composite-video signal and audio directly (not an RF signal at the antenna terminals).

Video stabilizers

To prevent purchasers of prerecorded videotapes from copying them, many professional duplicators use signal-processing schemes known variously as *Copyguard, Stop Copy,* and *MV-Guard*. All of those systems modify the vertical-sync pulse that normally helps TV sets to "lock" the picture and prevent vertical "roll."

If such modified video signals are fed into most home VCR's (as they would be during the copying process), not only is the resulting signal during playback likely to cause

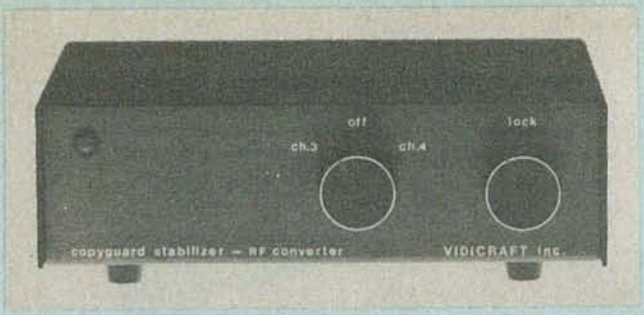

FIG. 6—VIDEO STABILIZERS prevent vertical roll by restoring the vertical-sync pulse when playing prerecorded videotapes. The *Copyguard Stabilizer/RF converter* from Vidicraft shown here also incorporates an RF converter for increased flexibility.

FIG. 7—DROP-IN CLEANING CASSETTE, the *Allsop 3* from Allsop, Inc. uses a "wet" cleaning system.

FIG. 8—SIMULATED STEREO SOUND is created by the *model SA-100* from Total Video Supply. It modifies the monophonic sound from your TV and feeds it to your stereo sound-system.

FIG. 9—JUST ABOUT EVERYTHING needed to set up and maintain a home-video system is included in this *model VAK-400* video accessory kit from Total Video Supply.

rolling of the picture, but in many cases a total loss of synchronization will take place, making the picture impossible to watch. Even if you have no intention of copying prerecorded tapes (and we warn readers that doing so may subject them to legal charges of copyright infringement), you may own an older TV set which cannot provide vertical picture-stability, even when watching the prerecorded tape itself. That is especially true if your set is a vacuum-tube type. type.

Several companies manufacture and sell fairly simple devices that fully restore the vertical sync pulse. Vidicraft, for example, makes a tiny device, the *Copyguard Stabilizer* with just a single control on its front panel; that unit sells for $98.00. Since the device uses video, rather than RF signals, two VCR's, or a TV set modified for use as a monitor, are required. A second model, the *Copyguard Stabilizer/RF Converter,* is shown in Fig. 6. That unit, which sells for $195.00, includes an RF converter so that it can be hooked up directly from a VCR to a TV receiver. Both units eliminate the roll and jitter problems associated with many pre-recorded video tapes. The RF modulator can also be used with any video source, such as the image enhancer described earlier, to generate a video-modulated RF signal for direct connection to a TV set's antenna terminals.

Video-care products

Makers of audio cassette-recorders have long encouraged owners of their products to "clean the tape heads often" for best performance. On the other hand, VCR manufacturers have taken the opposite position: almost every VCR owner's manual warns users against trying to clean the highly polished head-drums or head-cylinders found in VHS and Beta-format machines. Despite those warnings, there are many head-maintenance products that, if used strictly in accordance with the instructions, should not lead to premature head wear or head replacement.

Many of those cleaning products look exactly like video-tape cassettes. But, rather than containing video tape, they contain a tape impregnated with a mildly abrasive dry material that removes oxide particles from the tape head. One cleaner, made by 3M, actually displays a message on your TV screen that tells you when the cleaning process is finished. The message tells you when to turn the machine off and keeps you from overdoing the cleaning process.

One company, Allsop, Inc., manufactures a cassette-like cleaning system that it describes as a "wet" cleaner. The cleaning material in the *Allsop 3* (shown in Fig. 7), which has a suggested retail price of $29.95, is a soft chamois that is dampened with a liquid solution. According to Allsop, four critical components in a VCR are cleaned by its device: the video heads, audio head, capstan, and pinch roller.

All the methods mentioned so far do not require you to "go inside" the VCR—something that might void a manufacturer's warranty. The only company I know of that does encourage you to do this is Recorder Care, a division of Nortronics. The company feels that, if its detailed instructions are carefully followed, there will be little chance of damaging the machine.

Recorder Care markets a line of eleven products ranging from a complete maintenance kit (*model QM-50,* with a suggested price of $24.40) to cellular foam swabs ($4.80) and cleaning liquid ($4.20). The company also manufactures and sells a bulk video-tape eraser (*model VCR-211,* for $47.00) and a video-head demagnetizer (*model VCR-205*, for $21.20).

While most video accessories fall into the four categories we've just covered, there are still quite a few that do not. Since those items can also help increase your enjoyment of your VCR, we should take a look at at least some of them.

Waiting for stereo TV

Although Japanese TV-viewers have been enjoying stereo (and bi-lingual) audio for nearly three years now, our own Federal Communications Commission is likely to take another year or two before deciding upon a stereo-TV standard. Until then, however, you can hook up a stereo-simulating device, such as the *model SA-100* adapter, shown in Fig. 8, from the Total Video Supply Company. That small unit takes the mono audio from your television, turns it into simulated stereo, and feeds it to your high-fidelity system. Hooking up the unit is especially simple if your TV set is equipped with a headphone jack; no special wiring is required in that case. A

separate volume control is provided on the device, which bears a suggested retail price of $24.95.

Commercial killers

Several companies offer devices billed as "commercial killers." They are claimed to allow you to record off-the-air programming while automatically stopping the tape during commercials, thus providing interruption-free entertainment.

Two different principles are used. One type of commercial killer works only for black-and-white programs. As long as the material is transmitted in monochrome, the recorder runs. When it senses the color-burst signal, necessary for color (and it is assumed that all commercials are in color these days), the recorder pauses. When the color-burst signal disappears, the recorder starts up again. That is great for watching old Ronald Reagan films, but doesn't do much for his more recent TV appearances.

The other method relies on the assumption that, just before a commercial, the station will "fade to black" for a second or two. That instant of blank-screen is supposed to tell the recorder to pause. The next fade-to-black, presumably signalling that the program is about to resume, restarts the recorder. A little viewing on your part will demonstrate that the reliability of such devices is somewhat dubious.

Another type of accessory is an unconverter. Most VCR's have their outputs on either Channel 3 or Channel 4. While that won't usually cause any problems, that will not be the case if you live in an area where both of those channels are in use. In such a situation, the simplest solution is to use an upconverter. Those devices convert the RF output of your VCR, or any other video accessory, to a UHF frequency.

We have not included such minor accessories as cables, balun transformers, two-set couplers, and pin-to-pin video and audio cables, since those are supplied by a large number of companies and are generally available at any audio/video store. If you want to make your video-accessory shopping easier, the Total Video Supply Company has put together a Video Accessory Kit, *model VAK-400* that sells for about $34.00 (see Fig. 9). It contains just about everything needed to connect, use, and maintain home VCR's and video systems. Included in the kit are coaxial cables, a signal splitter, signal switcher, cable adaptors, impedance matching transformers, a VCR-head cleaning kit, and the company's "dubbing kit" for copying videotapes. **R-E**

SUPPLIERS OF VIDEO ACCESSORY PRODUCTS

Allsop, Inc.
4201 Meridian Street
Bellingham, WA 98225

Amco Electronics
9181 Gazette Avenue
Chatsworth, CA 91311

Beta Video
9612F Lurline Avenue
Chatsworth, CA 91311

BIB
1751 Jay Ell Drive
Richardson, TX 75081

Colormax Electronics Corp.
180 Northfield Ave.
Building 409, Raritan Center
Edison, NJ 08837

Comprehensive Video Supply Corporation
148 Veterans Drive
Northvale, NJ 07647

Energy Video
20371 Prairie Street
Chatsworth, CA 91311

ETCO
Route 9N
Plattsburgh, NY 12901

Malo-Bauer Corporation
35045 Automation Drive
Mount Clemens, MI 48043

Marken Electronics Inc.
Consumer Video Group
PO Box 1103
Northbrook, IL 60062

Metro Systems
3834 Catalina Street
Los Alamitos, CA 90720

MFJ Enterprises, Inc.
921 Louisville Rd.
Starkville, MS 39759

Niles Audio Corporation
PO Box 160818
Miami, FL 33116

Nortronics Co., Inc.
(Record Care)
8101 10th Avenue N
Minneapolis, MN 55427

Permo Int'l.
3001 Malmo Road
Arlington Heights, IL 60005

Recoton Corporation
46-23 Crane Street
Long Island City, NY 11101

Rhoades National Corporation
Box 1052
Highway 99 E.
Columbia, TN 38401

RK Electronics
30 South 1st Street
Suite 193
Arcadia, CA 91006

RMS Electronics, Inc.
50 Antin Place
Bronx, NY 10462

Robins Industries Corp.
75 Austin Blvd.
Commack, NY 11725

Shelton Video Editors
P.O. Box 860
Vashon, WA 98070

Showtime Video Ventures
2715 Fifth Street
Tillamook, OR 97141

Sigma Sound Equipment
PO Box 114
Pickering, Ontario, Canada L1V 2R2

Smith-Mattingley Productions
515 Kerby Hill Road
Oxon Hill, MD 20022

Sterling Video
PO Box 244
Fraser, MI 48026

Superex Electronics Corporation
151 Ludlow Street
Yonkers, NY 10705

TDK Electronics Corp.
755 Eastgate Blvd.
Garden City, NY 11530

The Video Place
PO Box 36004
Strongsville, OH 44136

3M Company
3M Center Bldg. 4E-03
St. Paul, MN 55144

Total Video Supply Co.
9060 Clairmont Mesa Blvd.
San Diego, CA 92123

Vancouver Video Center
4611 NE 112th Avenue
Vancouver, WA 98662

V.B.O.
18931 West Dixie Highway
North Miami Beach, FL 33180

Vidcor, Inc.
200 Park Avenue S.
New York, NY 10003

Video Commander, Inc.
3621 W. MacArthur Blvd.
Suite 109
Santa Ana, CA 92704

Video Components, Inc.
601 South Main Street
Spring Valley, NY 10977

Video Interface Products
19310 Ecorse
Allen Park, MI 48101

Video Mods
P.O. Box 2591
Sepulveda, CA 91341

Video Services Inc.
80 Rock Ridge Road
Fairfield, CT 06430

Vidicraft, Inc.
P.O. Box 13374
Portland, OR 97213

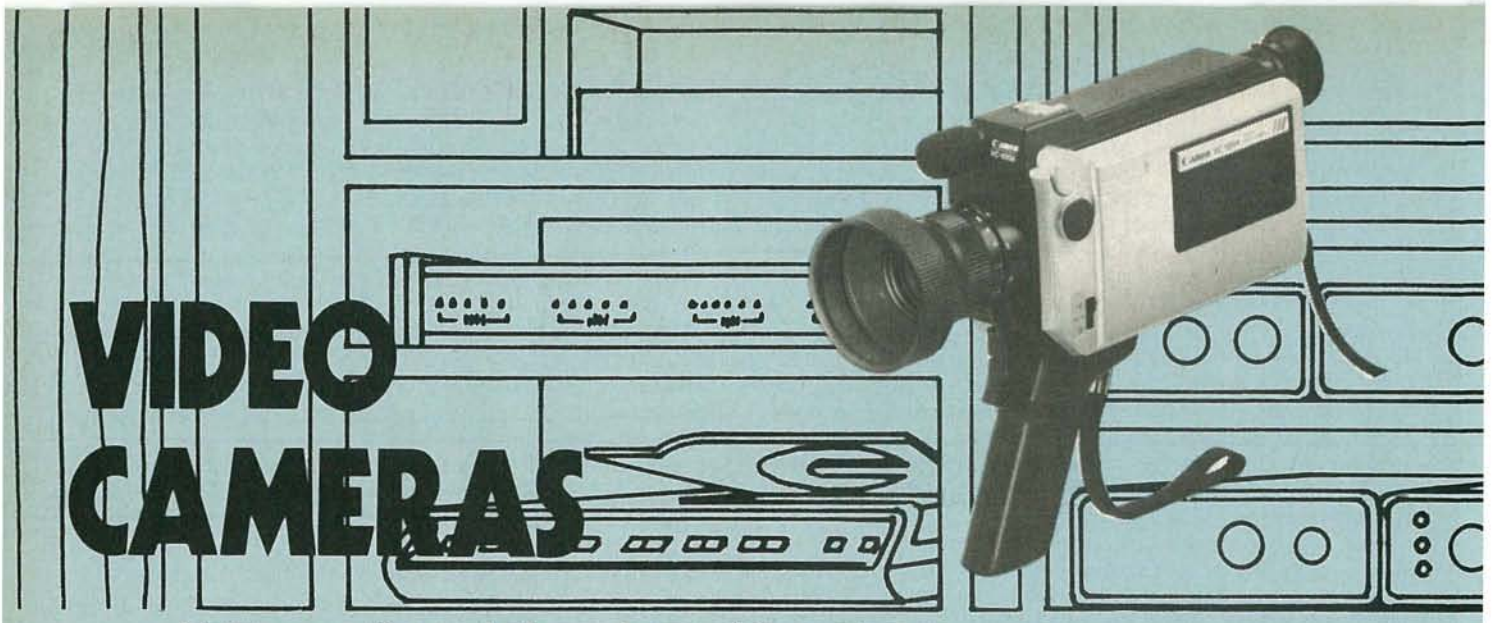

VIDEO CAMERAS

Make yourself a part of your home video system—add a video camera!

CARL M. LARON
ASSISTANT EDITOR

NOW THAT YOU OWN A VCR, HAVE YOU FIGURED OUT WHAT YOU are going to do with it? Of course, you can use it to record TV programs off-the-air, or view pre-recorded videotapes; but if that is all you do, you are missing out on what could be one of the most rewarding aspects of owning a VCR—recording your own programs.

Every family has those special moments—a wedding, a family reunion, your child's first steps, etc.—that become treasured memories. With a VCR, you can record those moments on videotape so that they can be relived as often as you like. In addition, many of us think that we could be actors, directors, or producers if given the chance; a VCR gives you that chance, even if your productions are seen only by your friends and family. To do all of that, however, you need one piece of equipment in addition to your VCR—a video camera.

But choosing which video camera best fits your needs will not be the easiest task that you have ever undertaken. To begin with, nearly every company that makes or distributes a VCR also makes or distributes a color-video camera; many make or distribute several models with different features. Prices for those cameras range from about $650 to well over $1500. So far it sounds pretty bad, but there are a few factors that do make the choice a little easier. First of all, nearly all such cameras produce outstanding color under good lighting conditions. Secondly, cameras that cost about the same, generally perform about the same. Because of that, once you've determined how much you can spend, your choice will be based strictly on how a camera's features meet your particular needs. However, before you can make that decision, you need to know how a basic video camera works, its limitations, and how the various features affect a camera's performance.

How a video camera works

The main purpose of a video camera is to transform the light reaching its lens into an electronic signal that can be recorded on video tape. The part of the camera that does that is called a camera tube. One such tube, a Vidicon (used in most low-cost cameras), is shown in Fig. 1. In that tube, light from the outside is focused by the camera's lens and falls on a light-sensitive conductive plate called the target plate. The conductance of any point on the plate varies proportionally to the brightness of the light striking that point. At the same time, an electron gun at the rear of the tube generates an electron beam that is swept across the target plate. The beam current that flows varies with the conductivity of the target, and can be used to generate a record of the brightness levels of a scene—in essence a black-and-white television picture. Color is added to the picture in one of several ways, the simplest of which is through the use of a color-stripe filter.

The primary difference between camera tubes is the composition of their target plates. Another difference is their size. While early home cameras used one-inch tubes, many new models use a ⅔-inch tube. The chief advantages of the smaller tubes is that they are not as susceptible to "image lag" (a streaking effect at low light-levels) and they make it possible to make smaller, lighter cameras. One disadvantage is that the smaller tubes do limit resolution somewhat.

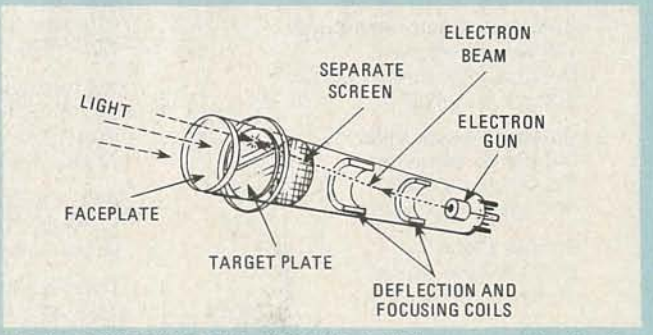

FIG. 1—CROSS-SECTIONAL DIAGRAM of a Vidicon camera tube. An electron beam from the rear of the tube is used to generate a record of the light and dark areas of a scene—in essence, a black-and-white television picture.

Some limitations

Technology aside, one of the biggest differences between a video camera and a film camera is that, rather than storing an image on film that is inside of the camera, the video camera stores the image on videotape that is inside the *videocassette recorder*. That means, of course, that your camera must always be connected to your VCR, limiting your range to the length of the cable. While that cable can be extended to a maximum of about 85 feet, any recording away from home will be impossible unless you have a portable VCR.

Color video cameras also require quite a bit of light for best recording results. Typical minimum illumination requirements range from 8 to 10 foot-candles (80 to 100 lux), although some, such as the RCA *model CC011* shown in Fig. 2, have minimum requirements as low as 5 foot-candles (50 lux), and one, the new Sony *model HVC-2200*, has a minimum light

requirement of just 4 foot-candles (40 lux). For best results, however, most manufacturers recommend lighting levels of 90 to 180 foot-candles (900-1800 lux). If you are shooting outdoors, meeting those lighting requirements will not be a problem because sunlight will produce nearly ideal pictures. That is not the case if you are shooting indoors, however; the average illumination in a moderately lighted house is about 9 foot-candles, which is close to, or even below the minimum requirements of most cameras. Generally speaking, using a couple of 250- to 500-watt photographic lamps is the easiest way to achieve the recommended illumination levels. But hot lights can be a hazard, and, at the least, add a few more cables for someone to trip on. Additionally, the bright lights may be a bit out of place in some situations, such as a wedding ceremony. Of course, if you are shooting at home and are unsure about the light level, you can always monitor the picture on your television set and make any needed adjustments.

The essentials

Generally speaking, all of the cameras available can be classified as one of three types, based primarily on the kind of viewfinder they use. However, as you will soon see, the viewfinder isn't all that's different.

The least expensive models use top- or side-mounted optical viewfinders; such a camera is shown in Fig. 3. Those cameras are really not much more than a camera body with a lens and a microphone. An optical viewfinder has many limitations, including the fact that it tells you almost nothing about the picture you are taking other than what will more or less be in the frame. In addition those viewfinders are useless with zoom lenses.

FIG. 2—ONE OF THE FEATURES of the *model CC011* color camera from RCA is its sensitivity in low light. It has a minimum light requirement of just 5 foot-candles.

FIG. 3—A LOW-COST COLOR CAMERA, this *model VCC542P* from Sanyo uses a simple optical viewfinder system.

FIG. 4—A TOP-OF-THE-LINE video camera, this *model IK-1850AF* from Toshiba features a movable electronic viewfinder and an auto-focus system.

On the positive side is the relatively low price of those units, generally less than $700. In addition, if you understand the camera's limitations and work within them, they really do take very acceptable pictures. If you are working on a limited budget, those cameras are a better alternative than black-and-white—at least for most applications. Also, in many cases it is possible to upgrade that type of camera by later adding an electronic viewfinder (more on those later).

If you know how a 35-millimeter SLR camera works, then you know how the next type of video camera works. Those cameras use optical TTL or *T*hrough *T*he *L*ens viewfinders that, using mirrors, let you see what the lens sees. That is extremely important with zoom lenses, and in fact, most TTL cameras use them. One disadvantage of this type of viewfinder is that, since some of the light must be split between the camera and the viewfinder, a little more light is required (about 10 to 25 percent) for good recording results. Also, a TTL viewfinder is something you have to choose at the time of purchase; you can't add one later.

If you are looking for a camera with all the "bells and whistles," then you should look into one of the "deluxe" cameras. One of the chief characteristics of those cameras, but by no means the only one, is their use of electronic viewfinders. An electronic viewfinder is essentially a miniature black-and-white television; color is not used because of the prohibitive cost. That type of viewfinder gives you the most information about the picture you are shooting because it shows you the video image, the signal that the VCR is receiving. In addition, many of the viewfinders have indicators or "idiot" lights that let you monitor the various conditions (such as exposure, whether the VCR is running, condition of the batteries, color balance, etc.) that could effect your taping. One unique advantage of an electronic viewfinder is its mobility. Most are mounted externally (see Fig. 4) and can be tilted up and down, or moved from one side of the camera to the other, for ease of use. Some can be completely removed from the camera, and attached to an extension cable for remote viewing.

The frills

While cameras can be grouped into the three main categories, that is not all that separates one camera from another. Almost every camera in every group has one feature that

separates it from every other camera in its own group, as well as those in other groups. Most of those features are useful, and help you get the best results from whatever camera you are using. Unfortunately, not every feature is on every camera; and even among cameras of the same type, the features will vary greatly from brand to brand. Because of that, it is an impossible task to pick a best camera for everyone. That choice is a personal one and will be based mostly on how you plan to use the camera, and how much you want to spend.

Almost all cameras have some sort of microphone. Some have microphones built into the camera body itself, while others have microphones located on telescoping booms; although more susceptible to damage, the boom-mounted microphones do a better job. Some cameras also have microphone-input jacks and those do make the unit more flexible.

One of the most important parts of the camera is the lens. Aside from the least expensive models, most cameras have some type of zoom lens. While the lenses are generally top quality, two factors effect their versatility: the range of focal length and the speed. A zoom lens is really several lenses in one; the most common ranges of focal lengths are 3:1, 4:1, and 6:1. The lens' *minimum* focal length also plays an important role in determining which lens is most suitable for a particular situation. In general, a short minimum focal length will make a lens a little better suited for indoor work; a longer minimum focal length is a little better for outdoor work. Lens speed, given by an *f* number (just like a still camera), refers to the maximum aperture or lens opening; the lower the *f* number the wider the maximum aperture and the more light the lens will admit. Thus an *f*1.2 lens will have a larger maximum aperture than an *f*1.8 lens. Incidentally, most lenses can be changed. That's especially true if your camera uses the popular C-mount; that mount is also used for photographic lenses.

One rather useful lens feature is an automatic iris. What it does is to adjust the aperture automatically, so that the proper amount of light is let into the camera. That also helps prevent accidentally burning the camera tube. Since video cameras have a limited contrast range (the ratio of the brightest part of the picture to the lightest), the aperture setting is critical to obtaining a good color picture. In addition, some cameras have a backlight control that lets you handle situations in which the subject is standing in front of a source of bright light.

As mentioned before, if your camera has an electronic viewfinder, you are almost sure to have a built-in exposure indicator; some TTL cameras also have those indicators. Another feature that is found on a few cameras is a low light-level or sensitivity control. That lets you take pictures under poor lighting conditions with acceptable, although rarely optimum results.

Some new cameras, such as the one shown in Fig. 4, offer auto-focus systems. In those systems, all you need do is point the camera and shoot; the focusing is done electro-mechanically. The auto-focus system can be overridden when needed, such as in a close-focusing situation.

All color cameras must be adjusted for the specific lighting situation. That is because the characteristics of different types of light, or the light's color temperature, can affect the way an object appears. That is the reason that some type of color compensation or a color-temperature control is needed. In its simplest form, it can take the form of a filter that is placed over the lens. More advanced cameras have two to four preset adjustments that balance the camera for the ambient light conditions. Those adjustments are selected by a switch on the side or rear of the camera.

For the most precise adjustment, some cameras add a fine-tuning or white-balance control. That control gives the camera a reference as to how a white object should appear under the prevailing lighting conditions. To set it, simply point the camera at a large white object that is illuminated by the light you will be using, and adjust the control until a meter (either in the viewfinder or on the outside of the camera) gives the proper reading. That control must be adjusted every time the lighting changes.

Other features to look for include automatic fade-in and fade-out, locking controls that prevent accidental operation, mounting brackets for auxiliary microphones and lights, and a tripod mount. All of those lend more flexibility to your camera.

Shopping around

Shopping for a video camera is a lot like shopping for any high-technology electronic product, only perhaps a little harder. If at all possible, try a camera out under daylight and low-light conditions. Also try out the controls to see if they can be adjusted easily. Another important thing to check is the focusing mechanism; see if the camera focuses easily and, in the case of TTL cameras, if the focusing aid (either micro-prism or split-image rangefinder) is easy for you to use. Among the specifications to look for are the signal-to-noise ratio, the resolution, and the minimum-illumination level.

Most video cameras are small and lightweight. But weight is not the only factor that determines how comfortable a camera is to use. Balance, location of the viewfinder and controls, shape of the handgrip, and many other factors all play a part. Also, it is possible that a camera could be too light, making it difficult to hold steady. Broadcast-camera manufacturers actually add weight to their units to make them easier to use.

As you can see, there are quite a few choices to be made when you purchase a camera. To help get you started, we've compiled a list of camera suppliers (see Table 1). **R-E**

TABLE 1 — **VIDEO CAMERA SUPPLIERS**

Akai America Ltd.
800 W. Artesia Blvd.
Compton, CA 90220

Cannon
10 Nevada Dr.
Lake Success, NY 11040

Curtis Mathes Corp.
1 Curtis Mathes Pkwy.
Athens, TX 75751

GBC CCTV Corp.
315 Hudson St.
New York, NY 10013

General Electric
Portsmouth, VA 23705

Hitachi
401 W. Artesia Blvd.
Compton, CA 90220

JVC Corporation
41 Slater Dr.
Elmwood Park, NJ 07407

N.A.P. Consumer Electronics Corp.
(Magnavox, Philco, Sylvania)
I-40 and Straw Plains Pike
Knoxville, TN 37914

Panasonic
One Panasonic Way
Secaucus, NJ 07094

Quasar Company
9401 W. Grand Ave.
Franklin Park, IL 60131

RCA
600 N. Sherman Dr.
Indianapolis, IN 46201

Sanyo Electric, Inc.
1200 W. Artesia Blvd.
Compton, CA 90220

Sharp Electronics Corp.
10 Keystone Pl.
Paramus, NJ 07652

Sony Corporation of America
9 W. 57th St.
New York, NY 10019

Technicolor
299 Kalmus Dr.
Costa Mesa, CA 92626

Zenith Radio Corporation
1000 Milwaukee St.
Glenview, IL 60025

VIDEODISC SYSTEMS

What's the difference between the four systems? How do they work? Which system will best fit your needs? The answers to those and other questions can be found below.

BEBE F. McCLAIN*

VIDEODISC TECHNOLOGY IS FAR FROM NEW; MANY SYSTEMS have been developed over the years. Today, only four systems are being marketed—or are planned to be marketed—before 1982 comes to a close.

Over 50 years ago, John Baird recorded video signals on a wax disc. During the half century that has passed since then, videodisc systems have been developed independently by Hitachi, I/O Metrics, SEO, Syndor Barnt Scanner Corp., Digital Recording, Robert Bosch, and MDR. And those are the systems that never came to market!

In the 1960's, a good deal of work that was done by 3M and Westinghouse greatly advanced videodisc technology. But it wasn't until the 1970's that decisions were made that resulted in the four systems that exist today. During the past 10 years, an ever-increasing program of research and development devoted to videodisc systems has resulted in an explosion of technology, and a number of systems.

The first system to be marketed was developed by Teldec (Telefunken-Decca). It is no longer available. That system used a grooved 20-cm (approx. 8 inches) flexible disk that was read by a stylus.

Those systems that *did* survive, were developed by the following companies:

RCA	CED system has stylus riding on grooved disc with pits.
JVC	VHD system has stylus riding on non-grooved surface with pits.
Philips MCA	Reflective optical system uses a laser to read shiny disc with pits.
Thompson CSF	Transmissive (non-reflective) optical system uses a laser to read clear disc with pits.

While all four of those systems will have become available before the end of 1982, it is difficult to predict whether all four will survive. The first three systems are aimed at the consumer market. The fourth (Thompson-CSF) is definitely an industrial unit that is much higher priced; the discs it uses are not commercially available but must be custom-made for the user. Yet there are numerous applications for that system in business and industry.

Videodisc systems were developed because they are the most economical way to mass-produce programs containing both audio and video information. A single master disc is made, and from it (just as with audio-only recordings) thousands of discs are pressed quickly and inexpensively.

The stamping takes only seconds, and the raw materials are few and inexpensive compared to videotape duplication. Even more important: The picture quality delivered by a videodisc is better than that from a ½-inch VHS- or Beta-format videotape. And the sound is high fidelity, stereo and/or dual-language capable.

The more industrial-oriented type of videodisc players are able to find and freeze-frame any one of the more than 50,000 frames crammed into each side of the disc. That means that 50,000 individual pictures could be stored on one side of a disc, then called up and displayed on the TV screen in seconds. As opposed to videotape machines, a videodisc machine can freeze frames for long periods of time.

Unlike the home videotape machines, the videodisc machines are used for playback only; they can not record. When a videodisc is played back, the video picture is displayed on the screen of a conventional TV (color or B&W) and the accompanying audio comes through the TV speaker. Some videodisc machines have stereo capability, but they must be hooked up to a home-stereo system to make use of it. None of the four videodisc formats are interchangeable.

A typical videodisc is about the same size as an LP phonograph record, but contains both audio and video information. The information is contained in pits arranged in spiraling tracks or grooves on the disc.

Let's take a brief look at the relationship between the TV signal and the pits on the disc. The TV signal that represents the program that is eventually put on a disc is composed of three separate signals. Those elements are: a) luminance (brightness), b) color, and c) sound (see Fig. 1).

The peaks and troughs (tops and bottoms of the signal (d in Fig. 1) are "clipped" off. The distance between each wave (e) is representative of the length of the pit that is engraved into the surface of the disc. The length of the pits and the number of pits per second determine how the picture on the screen will look. When a disc is played, the pits are read and changed back into a TV signal.

Videodiscs that have grooves, have many more grooves than stereo phonograph records. In fact, 50 to 75 grooves filled with video information fit into a space the width of a human hair.

*This article is an excerpt from Bebe McClain's forthcoming book on videodisc systems and manufacturing.

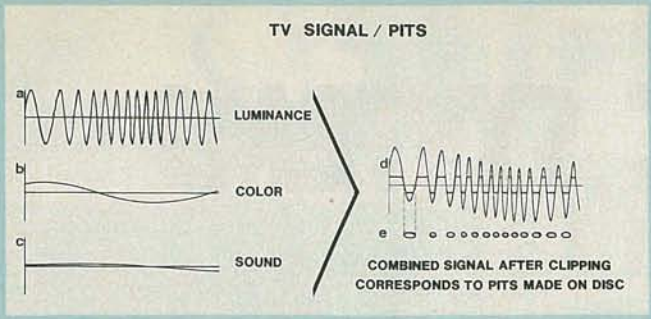

FIG. 1—THE TV SIGNAL placed on the disk is composed of three seperate signals—luminance, color, and sound.

There are two basic types of videodisc players. One is the optical player that uses laser light to read the pits in the tracks of the disc. The other is the capacitance player; it uses a stylus that actually rides the surface of the disc. That stylus, in combination with the disc itself, forms a variable capacitor that converts the signal placed on the disc into an electronic representation of the TV signal originally recorded. There are two different kinds of capacitance-type disc players. One plays a disc that has grooves (the CED system); it uses a diamond stylus. The other (the VHD system) plays a disc that has a grooveless surface and uses a diamond or a sapphire stylus. In both versions the stylus actually contacts the surface of the disc.

There are two optical-type disc players, too. One plays a reflective disc (Philips), while the other (Thompson CFS) plays a clear, transmissive disc that allows light to pass through it. Both use a laser beam whose light focuses on pits in the disc. Nothing physically contacts the disc's surface during playback in either of those optical systems.

The capacitance system with grooves was developed by RCA; the grooveless capacitance system came from JVC. The names listed in Table 1 and Table 2 are interchangeable.

TABLE 1—CAPACITANCE SYSTEM
Mechanical, Contact Stylus

CED (*C*apacitance *E*lectronic *D*isc
Grooved
RCA System
Selectavision
VHD (*V*ideo *H*igh *D*ensity)
Grooveless
JVC System
Matsushita System

The optical systems, as a group, are often called VLP (*V*ideo *L*aser *P*layer) or Laservision. The optical system that uses a reflective disc is usually defined as reflective optical. The optical system that uses a clear transmissive system is usually called transmissive optical. The two different formats are often identified by the name of the manufacturer that makes either the player or the disc.

TABLE 2—OPTICAL SYSTEM
Laservision, VLP, Non-contact/Laser

Reflective
Magnavision
Discovision
Sony System
Philips System
Universal Pioneer System
Optical/R
MCA System
IBM System
Laser Disc
Transmissive
Thompson System
Optical/T

All videodisc machines do not include the same special features. Some may offer fast and slow play in either forward or reverse; some have a single audio channel while others have two audio channels. In addition to including special play features, some players have microprocessors built in that make it possible to access any individual frame in the program immediately and either freeze-frame it on the TV or use that frame as a starting point for the program to follow.

The same programs are not available on the various sytems. Many film companies, TV program distributors, record distributors, etc., have signed agreements with one or more manufacturers to supply programming. Program availability is one of the foremost concerns of potential purchasers.

RCA's CED system

The CED format uses a grooved disc and a contact stylus (see Fig. 2). It was designed by RCA as a simple, low-cost consumer machine that is very similar to a record player. It uses a diamond-tipped stylus that is easily replaced when it wears out. It plays a two-sided disc that has microscopic grooves in which the stylus travels. There are 10,000 of those grooves to the inch; they are so narrow that you could fit 38 of them inside one groove of a standard LP audio disc.

The stylus has a electrode tip that is actually half of a capacitor. (The disc itself acts as the other half.) As the stylus travels down the grooves on the disc, the resulting capacitance variations generate changes in the electrical signal that are converted into video and audio signals.

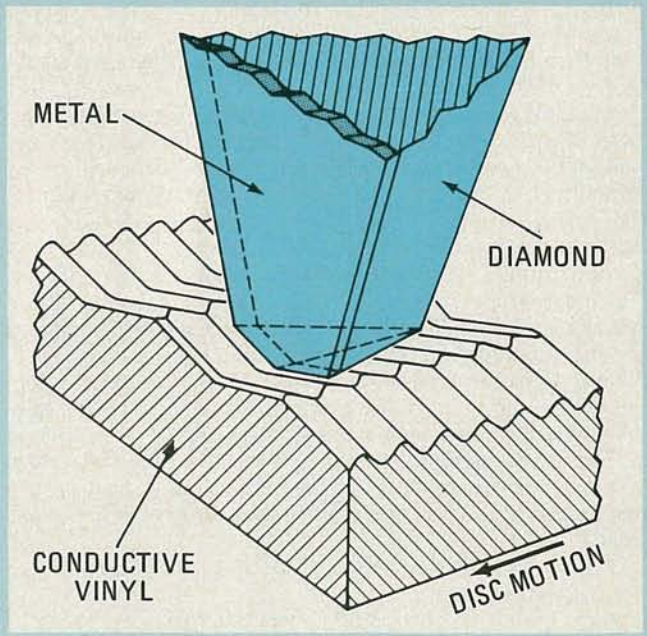

FIG. 2—MUCH LIKE A PHONOGRAPH, the CED system used a diamond-tipped stylus that rides in a groove on the disc. The stylus can be replaced easily.

The stylus rides in grooves that contain pits of different lengths. The stylus senses the electrical changes between where there is no pit and where there is one; the signal that results is transformed into a TV signal.

Because the stylus *does* contact the grooves, the disc must be kept totally clean. It is enclosed in a caddy for protection. The caddy unlocks when it is inserted into a player and the disc is left behind as the caddy is removed.

The caddy is marked side 1 and side 2. Each side plays for one hour, after which the disc must be removed from the player with the caddy, flipped over and re-inserted. On the player, there is an elapsed-time readout, calibrated in minutes, so the viewer can see where he is in the show or can access any particular minute. Other features include visual search that provides a fast-forward or fast-reverse function where the program can be viewed at 16 times normal.

Right now, players that will deliver stereo sound are not available but some discs are being recorded in stereo for use with future playback units offering stereo playback.

In the CED system, four frames of video are placed into each track (one track being one lap around the disc. That means that there are four still pictures read during each revolution of the disc. If one track were played over and over again, as must be done for freeze-framing, four frames would be repeated, and the resulting picture would be jumpy. For good freeze framing only one frame should be repeated. That is why freeze frame is not possible when playing conventional shows on the CED system.

The CED system is by far the simplest system. Because the stylus travels in a groove, there is no need for the additional tracking mechanism that all the other systems need to keep the stylus from wandering all over the disc. Also, since light isn't used as in the optical system, no light-focusing devices are needed.

The CED disc only has one coating applied after it is pressed; that is a lubricant that decreases wear and increases the life of the disc and the stylus.

To date, color-TV manufacturers representing over 50% of the U.S. color-TV market, have indicated their intention of introducing CED-type videodisc players (RCA, Zenith, J.C. Penney, Sears, Sanyo, Toshiba, Hitachi, Radio Shack). RCA has already sold some 40,000 to 50,000 players and hopes to have brought that number to well above 200,000 before the end of 1981. They are also looking for sales of more than 2 million discs made by both RCA and CBS before the end of 1982.

The VHD (*V*ideo *H*igh *D*ensity) system

This system has been seen only in prototype form, but its manufacturers promise that it will be available in the next few months. Originally, JVC and Matsushita developed different systems; but later, they decided that they would both manufacture units using the JVC technology. Matsushita, which owns a large part of JVC, abandoned its technology in favor of JVC's.

The VHD (*V*ideo *H*igh *D*ensity) system uses a grooveless disc that comes in contact with a sapphire (or diamond) stylus (see Fig. 3). The stylus has an electrode tip that reads electrical changes in the same way as the CED system. The main

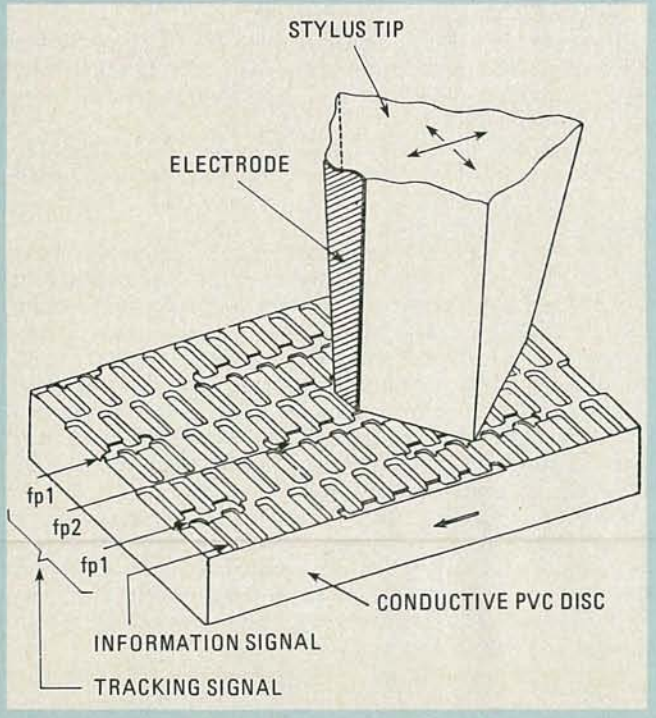

FIG. 3—INSTEAD OF GROOVES, the VHD system uses a series of pits. As in the CED system, the stylus comes in contact with the disc's surface.

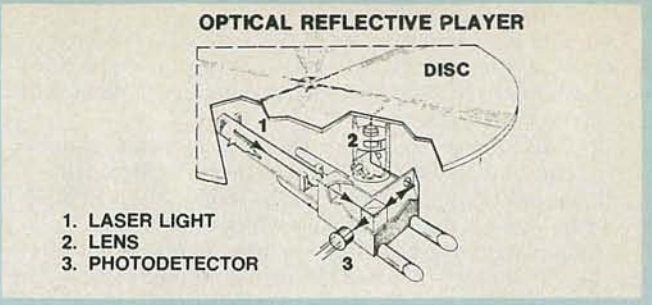

FIG. 4—THE VLP VIDEODISC PLAYER was the first consumer device to use a laser. The three main parts of the system are shown here.

difference is that there are no grooves—only a series of pits in spiraling tracks situated on the disc's surface. Also, like the CED system, the VHD stylus generates different electrical changes as it comes into contact with areas of pits versus areas of no pits.

To explain further, the VHD playback stylus has an electrode that, like the CED stylus, is actually half of a capacitor. The disc is the other half; the electrode detects capacitance variations between the disc and the stylus. Again, the electrical signal is directly related to the spacing and the size of the pits. The resulting signal is converted into a video signal that plays through the TV. The pits are similar to those in the CED system, but they are turned sideways.

There are no grooves to guide the pickup stylus and keep it on the right track, so a tracking signal must be recorded on the disc. A corresponding tracking servo system is needed on the VHD stylus, to make the adjustments needed to keep the stylus on track.

As the VHD stylus travels over the disc, it comes into contact with 10 times more of the surface than the CED stylus does in the CED system. As in the CED system, the stylus must be changed when it wears out. The VHD disc is smaller than 12-inch CED disc; it's 10.2 inches, and it also must be enclosed in a caddy to protect it from dirt and scratches.

The VHD disc plays for 60 minutes on each side and must be removed from the player using the caddy, turned over, and then reinserted to play the flip side. There is variable slow and fast motion. The discs have two soundtracks, so stereo is possible if the system is hooked up to a home-stereo system.

Since the VHD system has two frames per revolution, it cannot have still frame. An optional unit is available to use with JVC's player that allows for still framing. Another optional unit makes the VHD player capable of playing digitally recorded super hi-fi audio (PCM) discs. By offering those options, the VHD system can be aimed at both the industrial and the consumer market.

Player and disc manufacturers are General Electric and the Matsushita affiliated companies, JVC, Panasonic, and Quasar.

Optical reflective system

The third system of the four present disc systems is the optical reflective format developed by MCA and Philips. This player (see Fig. 4) was the first consumer product to use a laser. The disc it plays is a record-type one, but with no grooves. It has a smooth, silvery, mirror-like surface as opposed to a grooved surface. It does not use a stylus. A safe, low-power gas laser light acts as a tracking guide and pick-up system as it scans across engraved pits on the disc.

A spiral series of pits around the disc form tracks. One track plays per each revolution of the disc. That represents one frame (one still picture) of the program. There are 54,000 tracks (with one frame each) on each side. It takes 1/30 of a second for the laser to scan one of those 54,000 tracks. Because one revoluton plays only one frame, it is possible to "still frame" a picture on the screen by repeating the same frame. (The laser just goes around the same track over and over again.) That is important for industrial and educational programs, where viewers want to stop the show and/or cata-

logue thousands of still pictures.

One side plays for 30 minutes. This unit also has multiple speeds in addition to standard play. They include both fixed- and variable-speed slow motion, fast motion, and rapid scan, in both forward and reverse.

If the disc being played was recorded in stereo, the disc player can be hooked up to a home stereo system with an amplifier and two speakers for stereo sound. It would otherwise play through the TV speaker, which is monaural.

A long-playing disc called CLV (*C*onstant *L*inear *V*elocity), that has 60 minutes per side, can be used on the player—but the still frame and multiple speeds are sacrificed.

Looking at this in more detail, the standard play, referred to as CAV (*C*onstant *A*ngular *V*elocity), has 30 minutes per side. Those discs have one frame per revolution. Since, in the standard play, the disc is always turning at the same speed it takes longer to go around an outside track than an inside track. The pits are more spread out on the outside rim and closer together on the inside rim. To extend the playing time, the CLV disc (*C*onstant *L*inear *V*elocity) was developed. By putting the pits closer together, four frames of picture could be put on the outside tracks instead of one. That number gradually decreases to one frame as you proceed to the innermost tracks. Since there is more than one frame of picture in some tracks, it would be impossible to repeat one revolution of the disc over and over for a still-frame effect. This long play is for movies and entertainment programs, where 60-minutes-per-side is desirable.

Let us now take a look at the technology behind this optical system. The reflective discs are covered with a metallic coating that enables the laser beam to reflect off the surface, through a lens, and onto photodetectors in the player.

As Fig. 5 shows, the laser (1) travels through the lens (2) and is reflected off the disc back through the lens (2) and out into the photodetectors (3). The actual system has a more complicated path than shown; the beam is reflected by a series of mirrors before it strikes the disc.

The end result is that the laser light, reflected by the disc, is concentrated onto a photodiode inside the player. When a light hits a pit in the surface, much of the light is diffracted about and is not reflected back into the lens. In essence, less light is received when a pit passes in front of the lens than when a smooth section of the disc does. In that way the pits modulate a current.

Because the optical reflective system uses a disc that has a protective coating, no caddy is needed. The pits are actually imbedded in the disc underneath the protective coating. Since no stylus contacts with the disc, dirt or scratches on the surface do not affect the playback. The disc is removed from the jacket and placed on the disc player's turntable as is done with a phonograph record.

An optical system is more complicated than a capacitance system because it has more mechanisms. Two additional systems are needed—one to keep the beam focused on the pits and one to keep the beam on the right track.

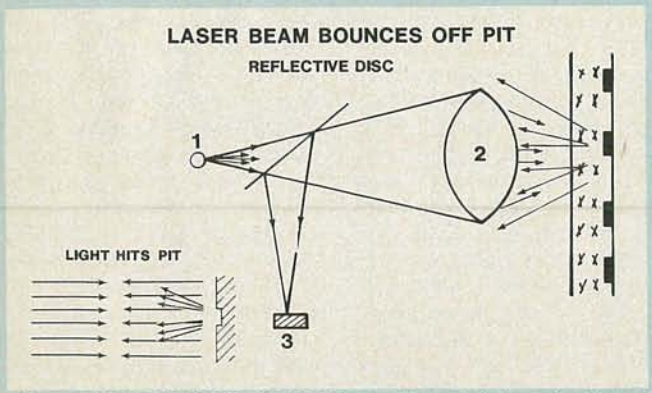

FIG. 5—THE LIGHT FROM THE LASER goes through the lens, is reflected by the disc back through the lens, and is picked up by a photodetector.

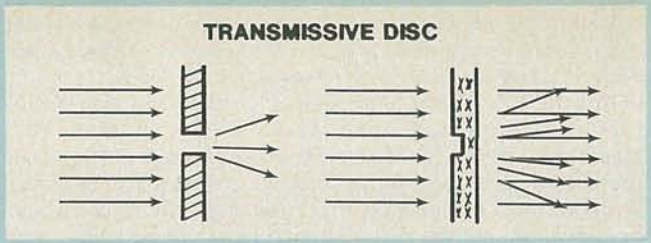

FIG. 6—IN THE TRANSMISSIVE OPTICAL SYSTEM, light from the laser passes through the clear videodisc.

The light beam needs a servo system to stay correctly focused on the pits within the track as the disc rotates. If the disc moves (vertically) up or down the light beam will not be focused on the track. To compensate for any such movement, there are two photodiodes, one on each side of the slit through which the light beam passes. After the beam passes through the objective lens, it hits the disc and reflects back equally onto the photodiodes. But if the disc changes position (moves vertically) the light beam is reflected more onto one photodiode than onto the other. Sensing that, the lens refocuses so that the light is evenly reflected.

In addition to that focusing system, a tracking system is needed to insure that the beam stays on the track and does not wander radially across the surface of the disc. As the main laser beam strikes the disc, two other light beams also strike it—one on each side of the main beam. Those two additional beams send information back to separate photodetectors that are part of the tracking system. The system adjusts the main beam radially to keep it on track.

It is interesting to note that in the optical system the pictures in the outer tracks are better than those in the denser inner tracks, and yet the manufacturers have seen fit to have the optical discs play from the inside to the outside. (The CED and VHD systems play like records—from the outside in.) That means that the first pictures seen are of the poorest quality found on the disc.

Transmissive optical system

The fourth and final system to be outlined is the optical transmissive format developed by Thomson CSF. It is designed for the industrial and educational market, and is priced at more than $3000 for the player. It can be interfaced with a computer for retrieval of information.

Thomson and 3M are mastering discs in this format. The price for having a program mastered is over $1500 for one side (30 minutes). Replication of discs from the master costs on the order of $18 each.

The system works on a method similar to the reflective optical system in that it uses a laser beam that reads pits that have been developed on the disc in spiral tracks. There are two sides to the disc, with pits on each side.

The disc is transmissive to light and the difference in the path of the laser light where there are pits, as opposed to where there are no pits, causes the modulation as the beam travels along the track (see Fig. 6). The laser light shines through the disc to photocells underneath the disc. Unlike all the other systems, it is not necessary to turn this clear disc over, since the laser can refocus on the bottom side. Since a protective surface is not applied, the disc uses a caddy that inserts with the disc into the player and is then removed (as with the CED and VHD system).

Like the reflective disc, one revolution represents one frame. Therefore, still framing is possible by merely repeating the same frame; variable fast and slow motion both forward and reverse are possible, too. There are two audio channels, but stereo play is not available now since only one channel can be played at a time.

As you can tell, that unit is intended to be interactive with the viewer and is not for the mass market, where viewers usually watch a program uninterrupted and do not need special features and retrieval capability. **R-E**

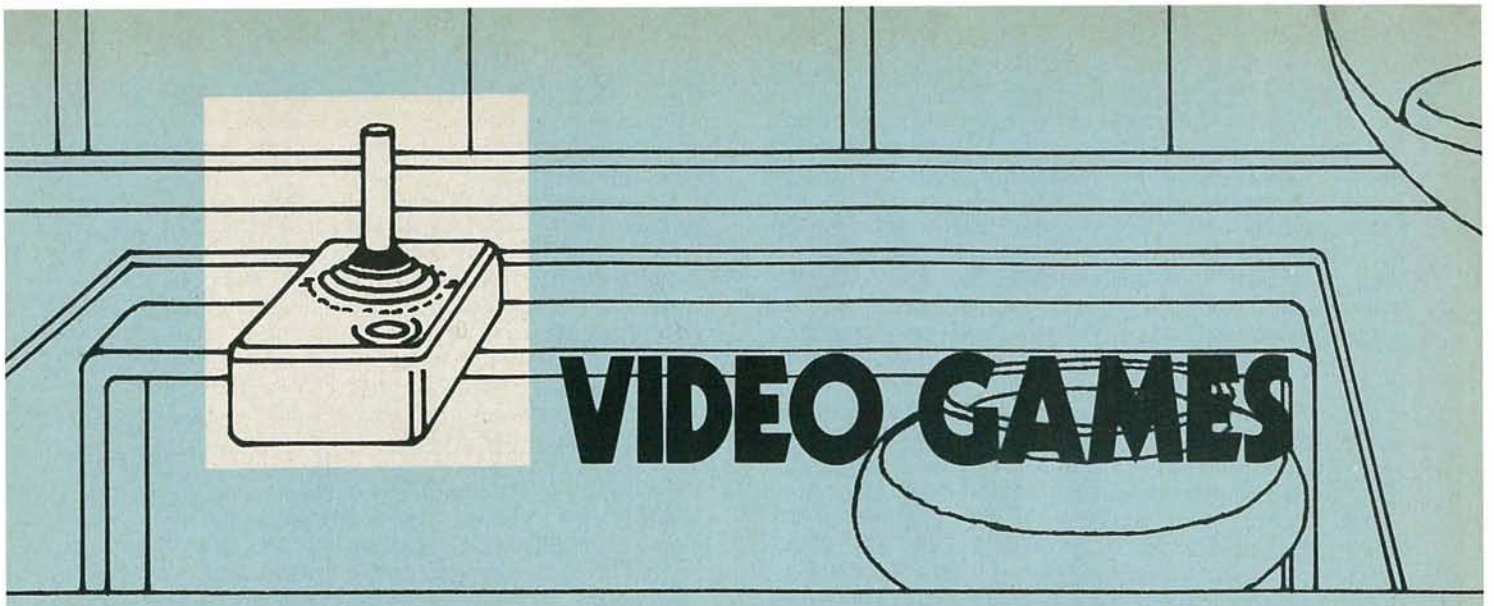

VIDEO GAMES

Enjoy the action and excitement of an arcade in the comfort of your home with one of these video-game systems.

DANNY GOODMAN

THE HISTORY OF THE HOME VIDEO-GAME DID NOT BEGIN IN guarded research labs of the late 1960's, where engineers worked round the clock trying to control blips on a TV screen, but in a bar in Sunnyvale, California. There, in 1972, Nolan Bushnell, founder of a small electronics company called Atari, was called in to fix a prototype *Pong* video game he had installed only two days earlier. The fault he discovered, was not in the circuit, but in the coin box—it was jammed to the gills!

It didn't take long for the game to appear in a coin-operated home version that hooked up to your TV set. You may remember the first Magnavox *Odyssey* video game—a simple gadget compared with today's—that sold in 1972 for about $100, even though the graphics were so limited that a TV-screen overlay was required for the background.

The home video-game has come a long way since those days. During the first few years, products were replaced every six months by less expensive models with more game variations. Things have been a lot more stable since 1977—the year that the first cartridge-programmable video game was introduced.

The programmable games released the avid game-player from buying an entire console unit for every new video game that came out: he could update his master console with a $25-$30 plug-in cartridge. And today, they're still selling like mad! When the sales figures for 1981 are finally tallied, they should show that nearly 2½ million consoles and over 20 million cartridges were sold. Now, a new coin-operated arcade game called *Pac Man* is breaking all records. The world seems to be going video-game crazy. For those of you who have had your eye on one of those home video-games, we'll take a close look at three of the major systems and see what kinds of games those machines play.

Atari *Video Computer System*

The Atari *Video Computer System*, which sells for under $200, is one of the survivors from a treacherous time in video-game history that saw the end of at least one formidable opponent, Fairchild's *Channel F* video game. Atari held on through the tough times, slowly rewarding early *Video Computer System* buyers with more and more cartridges. Atari now offers 43 different cartridges—the largest library of any video-game maker—and another dozen compatible game packs are available from a company called Activision (see below).

FIG. 1—THIS REMOTE-CONTROLLED Atari *Video Computer System* eliminates the controller wires and lets you control the action from anywhere in the room.

The Atari game console is a modest-looking affair, with a series of slide switches for power, color/black-and-white TV, game select, game start, and difficulty. The rear panel has a jack for the output from the power pack that plugs into the wall (that setup keeps the potentially-warm power transformer away from heat-hating IC's) and two nine-connector jacks for the hand controllers.

Two different types of hand controllers come with the console unit—joysticks and paddles. If you jump around from cartridge to cartridge, switching controllers gets to be a problem, with cords sometimes getting tangled up. Joysticks are used by 28 of the cartridges, paddles by 10. Two optional controllers are also available. Keyboard controllers with 12 pushbuttons are used by four of the cartridges; steering controllers are packaged with the only cartridge that uses them, *Indy 500*.

To help eliminate the maze of wires running to and from the console, Atari is gradually introducing a new wireless model (see Fig. 1). The wireless model, which sells for about $100 more, looks like something out of the 21st century. But a close inspection reveals the same console controls as the hard-wired version, but in pushbutton form. The control panel also has red LED's to indicate how the controls are

set; those can be seen from across the room.

The wireless unit accepts all of the available cartridges. Furthermore, we are told that aside from remote control, there is nothing about the wireless unit that will make the wired version obsolete.

The wireless hand-controllers are stored beneath a flip-top cover in the unit, keeping everything together. The controllers themselves have some well-conceived features: Each controller is a combination joystick *and* paddle; also, GAME SELECT and GAME RESET pushbuttons are on each controller, so you don't have to get up to start every game. The only thing missing is a robot arm to switch cartridges!

One of Atari's major attractions has been its ability to adapt very popular arcade video games to the *Video Computer System*. Since Atari makes many of the arcade games, they pretty much know which are the hottest. Most Atari cartridges have multiple-skill levels or variations in play—the 43 cartridges offer a total of almost 950 variations! Instruction pamphlets are, for the most part, easy to follow. A number of the cartridges offer truly challenging play. You should consider the following if you choose the Atari game:

Missile Command, from the arcade game of the same name, places you at the control of an antiballistic-missile base charged with protecting six cities. That by itself would be easy, except that your base and cities are under attack from waves of interplanetary ballistic-missiles and cruise missiles. For each wave, you have 30 ABM's (in three magazines of 10) to intercept the enemy missiles. Using the joystick, a cursor is moved to the point on the screen where you want your ABM to intercept enemy missiles; your ABM's are "launched" using the red button on the controller. An ABM rushes up to that spot and explodes. If the enemy missile is touched by the ABM's blast, it is destroyed. As you successfully defend each wave, another, more intense wave follows. Missile Command can be played by one player, or by two players taking turns. There is also a beginner's level so that you can get the feel of the game.

Adventure is a challenging game of logic, memory, and often hair-raising action. Your task in this one-player game is to locate an enchanted goblet hidden somewhere within castles, dungeons, and mazes of a video kingdom, and restore it to its proper castle. Other objects help you in your hunt: keys to castles, a bridge to go through dead-end mazes, a magnet to retrieve objects stuck in walls, and a sword for protection—but you can only carry one thing at a time. There are also three hungry dragons who will gleefully chase you through a pitch-black maze just to eat you. And just when you think you've got the game licked, the "magic flying bat" steals away your prize and hides it somewhere else. The game offers three levels of difficulty, in steps carefully planned to give you the feel of the kingdom and its mystical objects and inhabitants. The top level is the best, with all the objects scattered about at random.

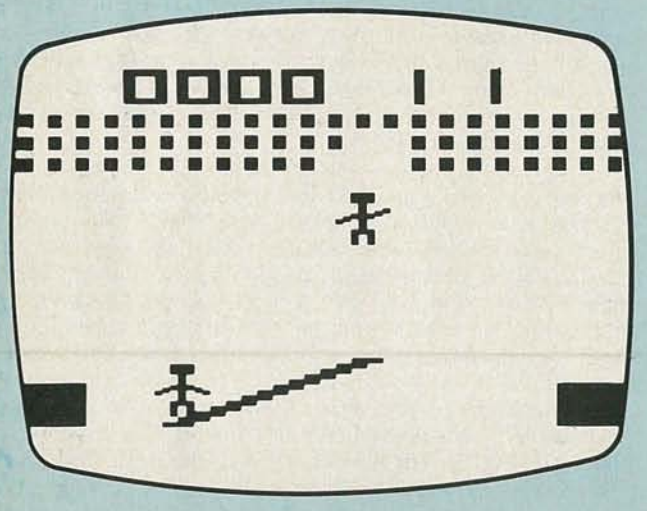

ONE OF THOSE GAMES that sounds almost too simple to be fun, try *Circus Atari* once, and you'll be hooked.

Circus Atari is one of those games that sounds almost too simple to be fun—but try it, and you'll be hooked. It has a broad appeal, perhaps because it is based on a humorous premise instead of attacking alien invaders. Two circus clowns must propel each other on a teeter-totter to hit and puncture three rows of balloons overhead. Your job is to position the teeter-totter under a falling clown so the other can get up there to break more balloons. Except it's not always easy to predict where those guys are going to fall. And if you miss—SPLAT! With a little practice you'll learn how to get the clowns to jump to the high-scoring top row. Every time you eliminate a row of balloons, a new one takes its place. One variation of the game changes the speeds of the jumping and falling clowns at random. *Circus Atari* can also be played by one person, or two can challenge each other, taking turns when an opponent's clown hits the floor of the "Big Top."

Activision cartridges

Atari owners have the advantage of a second source for game cartridges. After all, it takes a great deal of time to design, program, perfect, and document a consumer-oriented program, and there are only so many games a company even as large as Atari (or Magnavox or Mattel) can produce at one time. Activision is a company founded by four Atari game designers who went out on their own in late 1979. It has produced 12 cartridges for the Atari *Video Computer System*. Many of them have won awards in video magazines.

One significant feature of the Activision games is the quality of the instruction pamphlets. For the most part, they are easy to read, and get you playing the game very quickly. They also give you playing tips right up front, rather than having you learn the game's idiosyncracies along the way. To give you something to try for, most games against time or the computer offer you a chance to earn a membership emblem in a "club" for that cartridge by attaining specific scores. All you need is a photo of the TV display with your score on it. Each pamphlet also has a photo of the designer, with a few paragraphs about some of the game's special aspects. Whether or not those blurbs were actually written by the designers, they add a personal touch to the package not found on any other video-game cartridge.

Skiing is a one-player game offering your choice of slalom or downhill runs of varying length and difficulty. Unlike the usual "bombs away" video game, this one requires a light touch on the joystick to maneuver your skier through the gates. Just as in real life, it is a race against the clock, with elapsed time plus either the number of gates left on the slalom course, or the distance in meters remaining on the downhill run, displayed on the screen. The time to shoot for in the hardest slalom course is 28.2 seconds. A time better than that qualifies you for the "Activision Ski Team."

Freeway is an Activision game that is just plain fun for kids as well as adults. Here, one or two players try to maneuver as many chickens as possible to the other side of a 10-lane superhighway in two minutes and sixteen seconds. If a chicken gets hit by a car or truck, it has to go back, so you've really got to dodge the vehicles as they race by at varying speeds. As a warmup, you can try game 1, which is called "Lake Shore Drive, Chicago, 3 A.M.," with little auto traffic. Then you can build up to rush-hour car and truck traffic on Dallas' "LBJ Freeway." If you're good enough to get at least 20 chickens across, you can apply for a "Save the Chicken Foundation" membership emblem.

Kaboom is a maddening test of hand-eye coordination. The "Mad Bomber" runs back and forth at random along the top of the screen dropping live bombs; you can hear the lighted fuses crackle. You start out with three buckets of water, with

THE CONSOLE of the Magnavox *Odyssey²* looks more like a computer than that of any other video game.

which you must catch the bombs before they hit the ground, gaining points for each catch. If a bomb hits, all the bombs remaining on the screen explode; you lose a bucket, and the "Mad Bomber" smiles. But for every 1000 points, you can earn back one lost bucket. The "Mad Bomber" starts bombing slowly enough for novice players to get the hang of it. But each succeeding wave of bombs gets longer and much faster—up to 13 per second. It has all the addictive tension of a space invaders-type game, but is purely defensive. And 3000 points gets you in the "Bucket Brigade."

Magnavox *Odyssey²*

In the same price class as the Atari game is *Odyssey²* by Magnavox. It does not yet have as many cartridges as the Atari, but it offers a selection of games in arcade style, sports, and a few elementary-education activities.

The game console looks more like a computer than any other video game. A touch-sensitive typewriter-like alpha keyboard comes into play on a few games; numeric and reset keys are used with every game. A set of universal joystick controllers are hard-wired into the rear of the console—there's no need to switch around controllers from game to game. One welcome feature on the controllers is that there are shallow slots at each of eight directions around the circle; that comes in handy when trying to maneuver accurately along a diagonal path. With other games' controllers, you're never quite sure where that diagonal position is—which can cost you valuable time in getting away from some video attacker.

The majority of cartridges for the *Odyssey²* have coarser graphic displays than other video games. Characters and objects tend to be very block-like, and animation is somewhat stiff. But those characteristics would be noted primarily by frequent arcade game-players who are accustomed to high-resolution graphics requiring more program-memory capacity than *any* home video game. Younger children, and adults who don't get to the arcade too often, should thoroughly enjoy the *Odyssey ²* games.

Blockout! and **Breakdown!** are both offered in one cartridge. The object in *Blockout!* is to work your way through the four rows of colored blocks by paddling a ball up against them to destroy them. This part of the game is similar to Atari's *Breakout*. But there's an added challenge here—either the computer or a second player has control over little men on the rows of blocks who can restore destroyed blocks. Play goes on for 90 seconds, or until the offense breaks through. Then sides change, and the second player tries to outmaneuver his opponent. There are more subtleties to the game, with added variations in *Breakdown!*, that make this a highly competitive one- or two-player cartridge.

UFO, is an arcade space-battle game showing that the *Odyssey²* is capable of more detailed graphics displays than earlier cartridges indicated. As master of a battle cruiser, you meet a screenful of roving UFO's, some of which are quicker and more powerful than others. Two types are kamikazes that try to ram you. A third shoots at you, with deadly accuracy. Fortunately, your cruiser is surrounded by a force field that will ward off some shots at you and will destroy some of the kamikazes. Unfortunately, when your force field is hit, it is temporarily drained and needs an interminably long second or so to recharge. Fortunately, you also have a laser cannon to shoot at any UFO. Unfortunately, firing your laser also drains your energy field for a moment, making you open to attack. Fortunately, you can zoom all around the screen to escape or attack. Unfortunately, the direction of your laser is dependent on your direction of flight, which means you have to fly toward your menacing target. The alpha keyboard comes into play with UFO because you can enter the name of the highest scorer on the screen, where it stays for as long as the current series of games continues. Any number of players can take their shot at beating the highest score, and having both their scores and names appear for all to see.

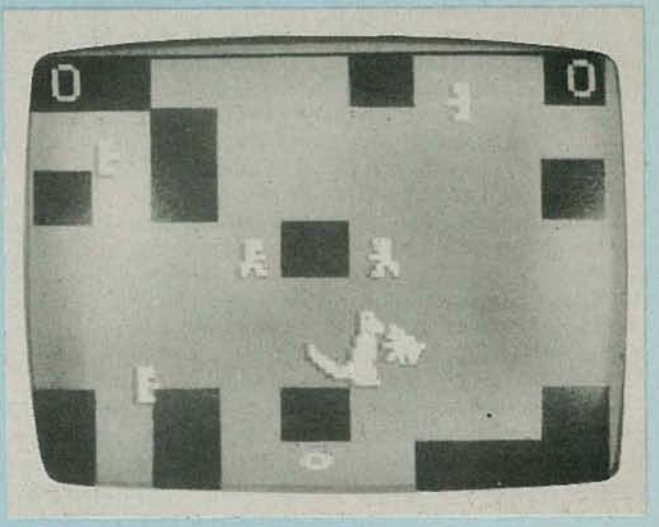

FIG. 2—FIREBREATHING DRAGONS, Doomwinged Bloodthirsts, and assorted other nasties inhabit the castles in *Quest For The Rings*, the video/board game for Magnavox's *Odyssey²* video-game system.

The Quest For The Rings, is a Master Strategy series game (see Fig. 2). At almost $50, it is the most expensive cartridge for any video game, but is more than just a cartridge. It is unquestionably the most elaborately packaged game around. Instructions are contained in a 30-page book with a gold-color-foil stamped cover; but what really makes *Quest For The Rings* unique is that it is both video game and board game. Here's how it works.

The first player (the "Ringmaster") hides ten ring tokens and assorted monster tokens under 23 castle tokens at each castle location on the game board. The game board is a map of a mythical land, with roads connecting the 23 castle locations. Two other players work together, advancing from castle to castle to search for all 10 rings. At each castle, they must search a dungeon, cavern, shifting hall, or inferno as designated on the underside of the castle token. The search takes place on the video screen, with the heroes using the controllers to go after the rings and escape the monsters. The conditions of each search are entered into the *Odyssey²* by the "Ringmaster," with the aid of a special keyboard overlay. The action shifts back and forth between board and video screen throughout the quest.

There are, of course, many more aspects of the game that take a little time to learn, but is well worth it. Graphics are rather detailed, especially when the "Doomwinged Bloodthirsts" gobble up a hero, or as the fire-breathing dragons huff about. There are also provisions for one or two heroes to practice against monsters in the various kinds of castles. This

is best as a three-player game, although just two can also play.

Mattel *Intellivision*

The newest video-game system is Mattel's *Intellivision*. It is priced at about $100 more than either the Atari or Magnavox units, but for that extra money, you get superior graphics, a better utilized sound package, more complex games, and the prospect of adding a keyboard unit that will offer you a full-fledged home computer (see Fig. 3).

The computer-keyboard component should be available nationally by the fall of 1982; it will sell for about $500. It features a 60-key typewriter keyboard and cassette player for prerecorded programs. Planned software includes *Conversational French* (with audio also on tape), *Physical Conditioning*, *Stock Analysis*, *Super NFL Football* (with instant replays), and educational programs. Mattel has also been demonstrating a voice-synthesis peripheral, which may be offered some time in 1982.

In the meantime, we have the *Intellivision* game console, an uncomplicated unit with an on-off slide switch and reset button on the top panel. Two game controllers are hard-wired to the top of the unit using coiled cords. When not in use, the controllers and cords are stored neatly in the console.

The universal controllers have a variety of action buttons (2 on each side), a 12-button numeric keyboard, and a direction disk capable of steering in 16 directions. To veteran players of Atari and Magnavox games, where you watch the screen while your hands work the controllers automatically, the *Intellivision* controllers may seem distracting on a number of games; you often need to input keystrokes during play. But that is also an advantage to the skilled player looking for challenging games requiring strategy and offering more realistic play. Many of Mattel cartridges are sports games, with two-player action only, not one versus the computer.

NASL Soccer is one game in which you don't need much eye contact with the controller once the game gets going. The offense controls the man with the ball, with the computer keeping the other offensive players in motion to help out. You can pass the ball to a computer-controlled offensive player. If he gets the ball, you are then in control of the new player. The characters are fairly well detailed, with a lot of animation. Dribbling the ball down the field, the game makes periodic "kicking" sounds—very realistic. On defense, you control the defensive captain and have partial control of the goalie. With the exception of offsides calls, the game has all the major elements of real NASL soccer—throw-ins, goalie kicks, and corner kicks. The sound of two men fighting for possession of the ball is also rather realistic. Side-to-side scrolling of the playing field is smooth, and it gives you the feel of playing on a full-size field.

FIG. 3—SUPERIOR GRAPHICS is just one of the features of Mattel's *Intellivision* system. The video game is shown here with the optional *Keyboard Component*, which should be available toward the end of 1982.

Major League Baseball is both graphically exciting and an interesting version of America's favorite pastime; here the game is won with good defense. Fielders literally run out to their positions from the dugout. The pitcher has the option of 8 different pitches, or he can throw to any infielder to try to tag out a runner with a big lead. There are no fly-outs in this game. The defense must use the controller to select the fielder who is to pick up the ball, then designate the infielder who is to receive the hit-saving throw. The faster you become in pressing the right buttons on your controller, the easier it will be to keep the offense from getting on base. The offense also has options up its sleeve, like leading off, stealing bases, and bunting. And, of course, there is always the chance of an over-the-wall home run. The game goes nine innings, with extra innings for ties. This too is a two-player game only.

Space Battle. No video game system is complete without some kind of space game, and *Intellivision* is no different. *Space Battle* is a one-player game that puts you at the center of a galaxy under attack by bands of alien ships. You have three squadrons, each with three ships, to defend your "Mother Ship." To survive, you need to deploy your squadrons to the most threatening alien bands, and destroy all their ships before they "zap" your squadron. It is possible to carry on three battles at once, putting two in control of on-board computers, while you watch the action of the third squadron. But you'd better be quick, because there are more alien bands than you have squadrons.

The game starts with you looking at a "galaxy-wide radar screen," showing where the alien groups are. Using the buttons of your controller, you send out the "blue," "white," or "yellow" squadron to meet the approaching enemy. When a squadron encounters the aliens, their position on the radar screen flashes. Pressing the GO TO BATTLE controller button for that squadron, you shift your perspective to the viewfinder of one squadron ship in your space dogfight. Alien ships twist and spin out of the way while firing lasers, just as in the movies. Things really get frantic when you're engaged in combat and you hear the alarm that the "Mother Ship" is under direct attack. But if you're quick and get all the aliens, you'll see "ALL CLEAR" on your radar screen.

Conclusion

As with nearly every major purchase, no one video-game system does everything the way you want it. Some players might want the combination of the broad selection of Atari/Activision cartridges, the potential of *Odyssey²'s* alphanumeric keyboard, the quality graphics and sound of the *Intellivision*, and the uncluttered appearance of the wireless Atari *Video Computer System*. But this overview of three popular systems will give you a feeling for how they compare. Whichever one you choose, though, you will have lots of video fun. **R-E**

VIDEO GAME AND VIDEO-GAME CARTRIDGE MANUFACTURERS

Activision
759 E. Evelyn Ave.
Sunnyvale, CA 94086

APF
1501 Broadway
New York, NY 10036

AstroVision, Inc.
6460 Busch Blvd., Suite 225
Columbus, OH 43229

Atari, Inc.
1265 Borregas Ave.
Sunnyvale, CA 94086

Magnavox Consumer Electronics Co.
I-40 and Straw Plains Pike
Knoxville, TN 37914

Mattel Electronics
5150 Rosencrans Ave.
Hawthorne, CA 90250

PROJECTION TV

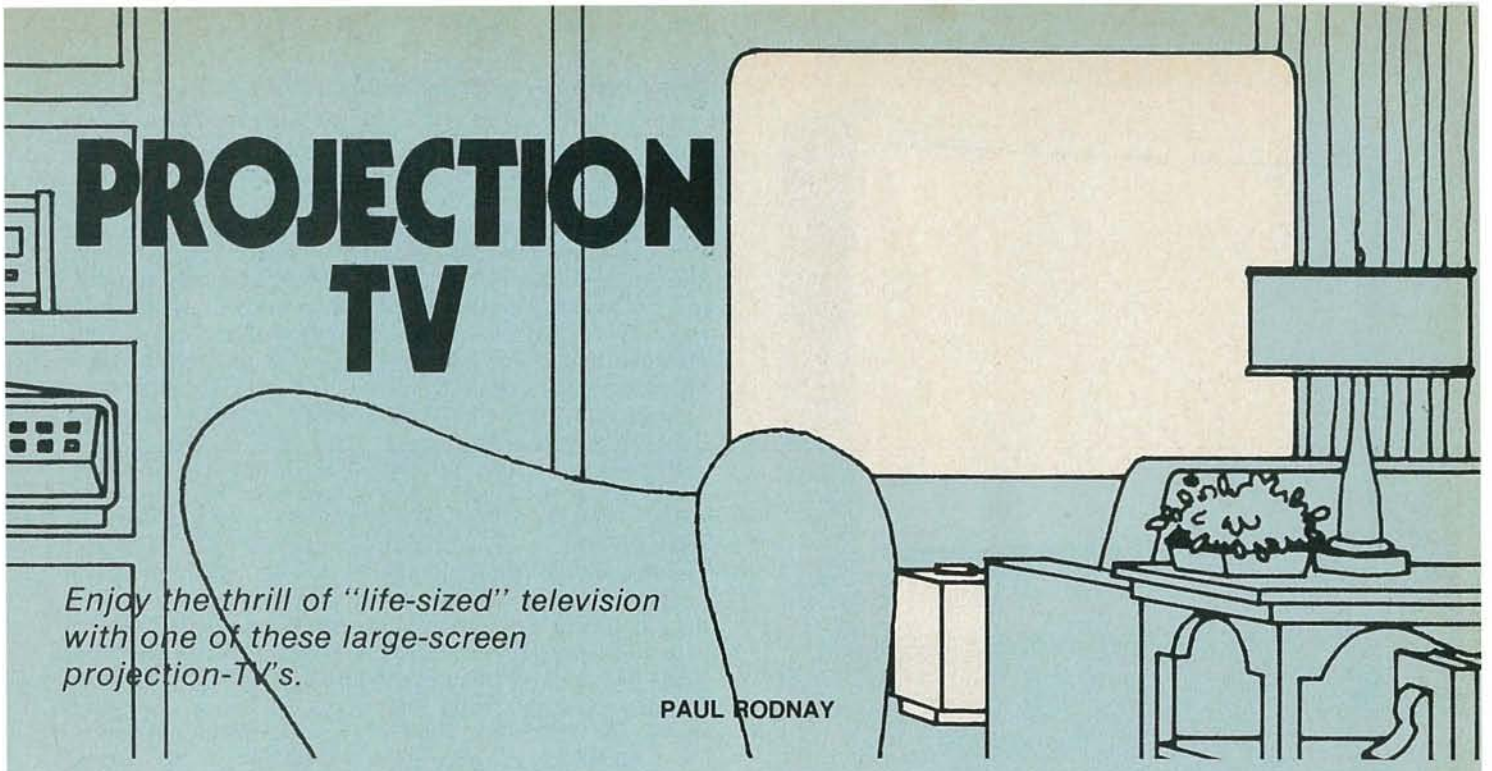

Enjoy the thrill of "life-sized" television with one of these large-screen projection-TV's.

PAUL RODNAY

HANG-ON-THE-WALL 3-D TV WON'T BE PART OF THIS 1982 VIDEO spectacular. But the big-screen TV *is* here—in the form of projection-television receivers. The only problem the buyer faces is making his decision. Now that doesn't appear to be any more difficult than selecting a new TV does it? After all, once you know you want a set all you have to do is go to your favorite retailer, select the model you want, and then shop around for the best price, right? *Wrong!* It's far from being that simple.

To start, there are three entirely different kinds of projection-TV systems to select from: and the selection's more complicated than deciding how much you want to spend. You could be willing to buy the largest, brightest, and best, but you might not be able to fit it into your viewing room. The three major categories of home projection-TV systems include:

1. Over the screen of a conventional TV receiver—the special lens takes the picture from the TV screen, blows it up, and projects it onto the screen.
2. Front projection—two or three separate projection-TV picture tubes that are coupled to individual lenses. Each tube/lens combination projects its picture (each one is a single color—red-blue-green for 3-color systems; magenta and blueish-green for 2-color systems) onto the screen. The pictures are carefully overlapped to produce a full-color TV image.
3. Rear projection—the tube/lens system is enclosed in a single cabinet, and through a system of mirrors and additional lenses the picture is formed on the rear of a screen mounted on the cabinet front. When that type of receiver was first introduced by General Electric it used a single three-gun projection CRT. The current model has three separate projection tubes.

There is actually a fourth method, too. It goes back to the first days of television—a magnifying lens placed in front of the TV screen. One such unit available today is a Fresnel lens that will double the size of the image you see. Since that is not big-screen television within the scope of this article it will not be mentioned again here.

The problem is further compounded by the different variations available in each of the three basic systems. For systems that simply place a lens in front of the screen of a conventional color set there are glass lenses and plastic ones. There are systems that require 15-inch TV's and others that call for 19-inch sets. There are 2-tube and 3-tube direct front-projection systems as there are 1-tube and 3-tube rear-projection systems. There are front-projection systems that come all in one piece and there are others that have a separate projector and screen.

What we are going to do here is give you an insight into the advantages and disadvantages of each of the three basic systems and take a look at the variations and their characteristics. You will then have the information you'll need to select a system that is right for you.

First some basics

The picture on the screen of a TV set is relatively bright. Usually, it is easily viewed—even with relatively high ambient light levels, as long as those lights do not fall directly on the TV screen. Naturally, bright sunlight falling directly on the screen will wash out even the brightest picture. The important difference between direct viewing and projection viewing is that in one instance we are looking directly at the source of the light, while in the other we are seeing the picture after it has been projected and then reflected from the screen to our eyes.

In any projection system that light, in the form of a TV picture, is fed through a lens system. All lens systems cause a loss—less total light comes out of the lens than was fed in. Then it is projected over a distance to a screen. The intensity of the light declines progressively as that distance increases. In addition the image is magnified, so that the light that originally filled—say a 5-square-inch area—now fills a 25-square-inch area. The total amount of light has not changed; it has been distributed over a larger area, so it is now much dimmer than it was originally. As a result, the CRT in a projection system must provide a much higher light level than a directly-viewed TV set, or the image that we see must be viewed in a room with less ambient light.

Another problem that large-screen pictures present can be summed up simply as: "It may be larger, but it won't be better, and it may be worse." That means that the picture quality is determined by the quality of the picture on the screen of the projection tube. Making it larger does not add detail; actually, the larger picture will probably not look as good as the picture on your 25-inch console. The number of lines of information has not changed, so the quality cannot improve! And if you have a less than perfect picture—ghosts, smears, snow, etc.—it will look still worse when it is blown up to 5 or 6 feet across. Every defect in the picture that you

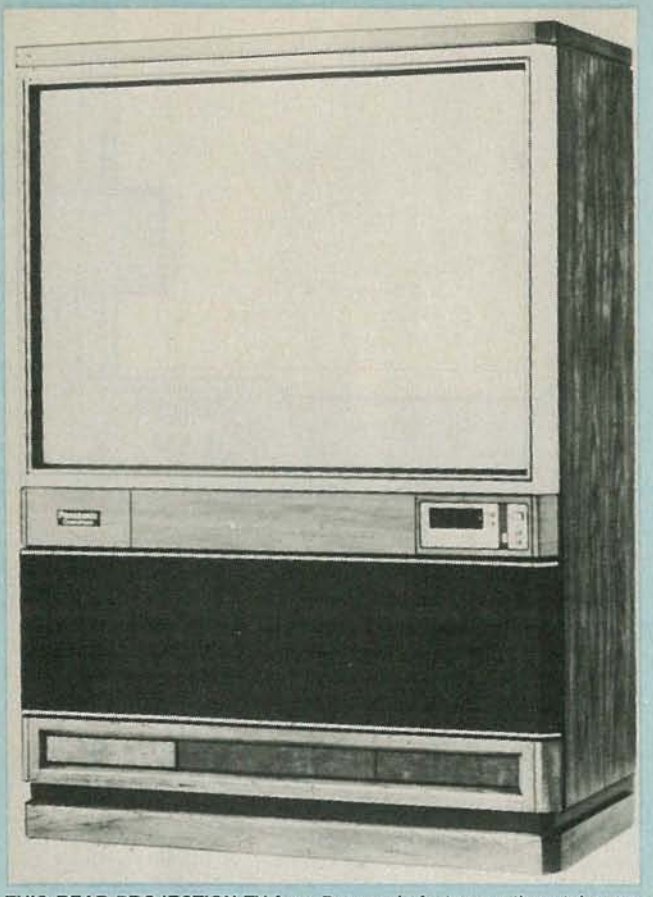

THIS REAR-PROJECTION TV from Panasonic features a three-tube projection system and a 45-inch viewing screen.

receive will be enlarged and emphasized in the huge picture delivered by a projection set. So unless you already have "near perfect" reception, be prepared to buy a new antenna.

Projection through a lens

This is the simplest and usually the least expensive method of delivering large-screen pictures. In it, a lens is placed in front of the screen of a conventional color-TV set. The image is focussed on a screen usually positioned several feet in front of the lens.

The good points behind that system include the obvious fact that it is inexpensive and simple. You can use an existing table-model TV. Generally, the larger the starting screen size, the brighter the image on the screen. Plastic lens systems are available. The only cheaper method than that is a magnifying lens placed in front of the screen—but that would limit the picture to about double the size of the set's screen.

There are disadvantages, too. It's like a movie theater: The viewing room must be kept relatively dark. The TV receiver is not designed to be part of a projector. Its light output level is not adequate enough for it to be used in a normally illuminated room. Since the projection unit includes a complete table-model color TV, it is relatively large and heavy. Positioning the unit and supporting it in a off-the-floor location can become a problem. Screen size is limited by the brightness of the picture that can be delivered. As we explained earlier, the brightness of light projected through a lens suffers a loss. Also, as you make the picture larger that same reduced amount of light is spread over a larger area making it even dimmer to the eye.

One other point about that kind of system. Since you are starting with *only* the light delivered from the picture tube of a TV set, anything less than an excellent lens system will introduce light losses that may not be tolerable. The quality of the lens used in this kind of system is critical. The more light you lose in the lens, the dimmer the picture.

Direct front-screen projectors

Probably the ultimate projection-TV system is the 7-foot screen from Kloss. The picture is gigantic; it's bright, and you'd love to own one. Of course, there are many others. Some combine screen and projection set in a single unit that unfolds. Others are two-piece units—a separate screen and a separate projector. My preference is for the two-piece system. It delivers the largest, brightest projection pictures that are available for home use. Of course, you need a large room. You'll have to keep 5 to 10 feet of space between the projector and its screen and you'll have to find a space large enough to place that screen. In addition, you'll need room to arrange your furniture to make room for people to sit where they can see the screen.

Because of the light problems in watching a projection TV, almost all screens built for projection TV are concave in shape. They focus the light falling on the screen so that it is reflected back at the viewers in a restricted angle. While that reduces the viewing angle, it improves the brightness of the image on the screen. But it also means that you have a limited area in which to arrange seats for the viewers.

In the one-piece sets, the screen and projector are combined into an attractive piece of furniture. When it's time for the news, your favorite soap opera, or that classic great movie, the "furniture" unfolds to reveal a screen and projector. Limitations of the system are the size of the screen. Maximum size is usually 3 × 5 feet. That's several times larger than a 25-inch set, but smaller than that 7-foot screen we mentioned earlier.

Another variation available in those sets is a 2-color projector. Only two projection tubes are used. The colors are combined, using the Land process, and believe it or not you get almost all the colors that a 3-color system would deliver. As there is one less projection tube, the system costs less. The two-tube system definitely works, but I'd recommend spending a little more for the 3-tube system. It is more natural and, most important of all, delivers a brighter picture.

Rear-projection systems

General Electric started this one with a console that had a 50-inch screen, one projection tube, and a set of elaborate optics that kept the picture inside the cabinet until it was projected (from the inside—hence the rear screen) onto the screen. To improve the brightness, G-E went to a three-tube projection system and today that type of TV set is available from a large group of set makers.

The pictures are bright and clear; not as large as those delivered by front-projection systems, of course, but certainly large enough for most viewing rooms. The great advantage of those units is that they are one piece. The space they fill when they are not being used is the same as when they are on, so it is easier to set them up, see how they fit into the room and leave them there. There is also some choice in cabinet styles.

On the negative side, that's one huge piece of furniture. In addition, the optical system is the most elaborate of any of the projection types. If any element should ever go out of alignment you could be faced with an expensive adjustment. Naturally, the manufacturers have sealed the optics to protect them against dust getting in and reducing picture quality; but after several thousand hours of use a cleaning may also be required; that is not a job for an untrained person.

Before you buy

Just like any other major purchase, shop before you buy. Look at all of the systems; see which one suits your needs first. Then, within the system type you choose, shop some more. Look at models, styles, and prices. Investigate warranties, find out who will do the set-up and take care of repairs, should they be needed later. Then buy and enjoy. Once you start watching those life-size images, you may not be able to go back to your table-model set again. **R-E**

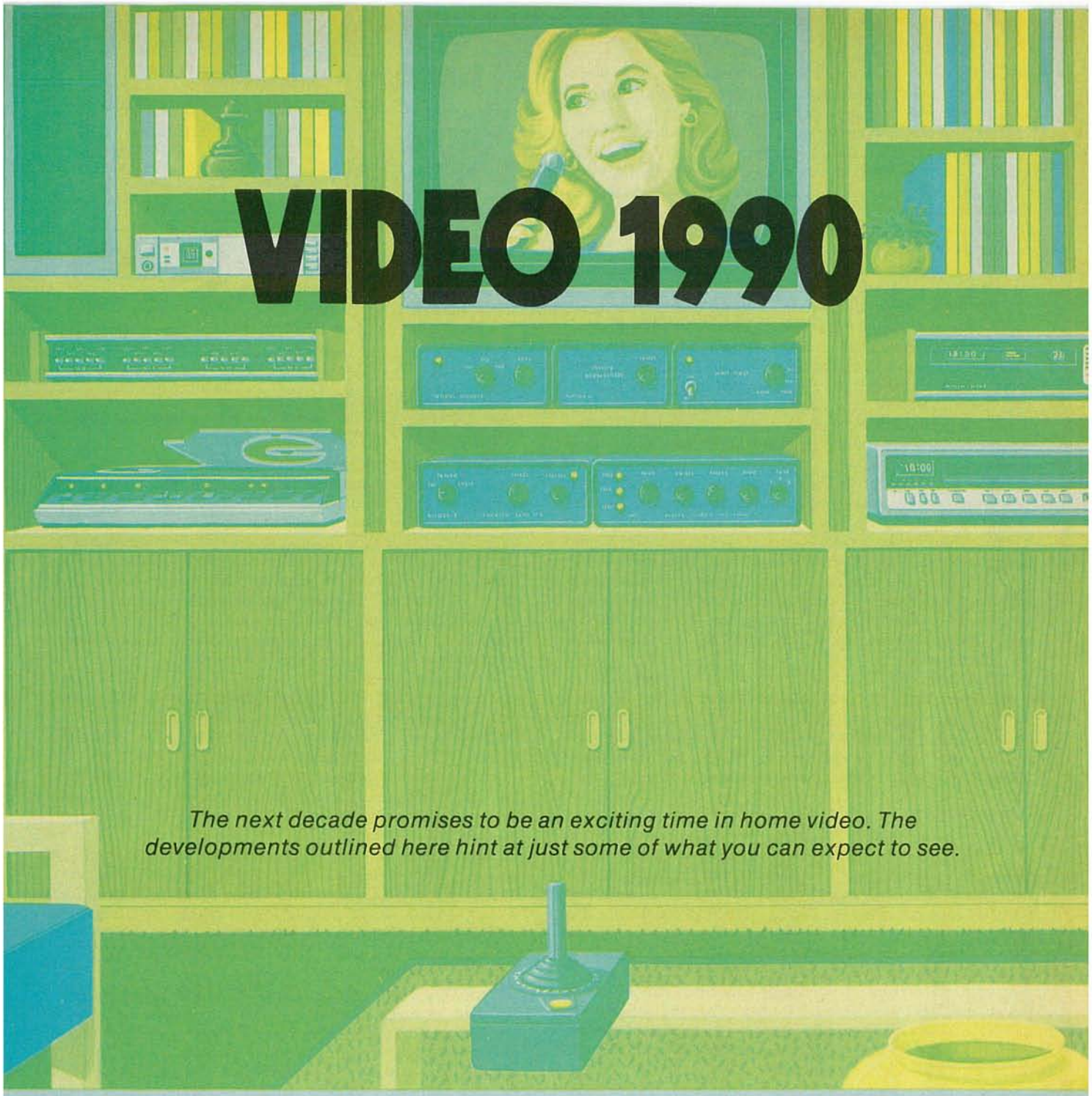

VIDEO 1990

The next decade promises to be an exciting time in home video. The developments outlined here hint at just some of what you can expect to see.

DANNY GOODMAN

WITH ALMOST TWICE AS MANY VIDEOCASSETTE RECORDERS (VCR's) purchased in 1981 than in 1980, it is safe to say that video fever is spreading. More consumers are seeking alternate or enhanced sources of video entertainment because the standard commercial-network fare seems less appealing. At the same time, improvements in microprocessor, digital, and optical technology will likely bring us many new video program-sources, as well as new ways of watching them.

It's surprising, but many "new" ideas aren't new at all. They have been kicking around research labs for decades, with occasional unsuccessful trials in the general marketplace. Like the Avco *Cartrivision* videocassette recorder of the early 1970's, they were products and concepts "before their time"—that is, before most of us were aware that television could offer something other than the Gong Show.

Let's look ahead at the video that is likely to come our way between now and the end of the decade.

Two-channel TV sound

Mention the word "stereo," and the first things that come to mind are hi-fi and music. With the introduction of stereo TV, perhaps as early as 1983, that may change. Actually, "two-channel" might be a better term than stereo; the difference lies in the circuitry, as well as the way it is used.

Stereo, as we said, implies music—which makes up only a small percentage of today's TV programming. But two-channel sound opens the way for multilingual broadcasts of drama, comedy, news, and—lest we forget—commercials. Broadcasters would have a way of reaching the large, varied non-English-speaking population in this country in their native tongues. For example, English might be broadcast on audio channel 1, and a second language on audio channel 2. Then, if a musical special, opera, or concert were broadcast in true stereo, a sub-audible pilot tone could be used to signal your TV to switch to the STEREO mode, turning on both channels

automatically. Other applications are possible, including a service for the blind featuring the regular audio on one channel and a descriptive narration on the other.

From a technical standpoint, two distinct voice tracks require more channel separation than is needed for stereo music. Otherwise, one channel may interfere with the other. Domestic manufacturers have been preparing for two-channel sound ever since AT&T changed its TV-network relay system from phone lines (with a top-end frequency response of 5 kHz) to microwave (with 15-kHz response). Up until then, there wasn't much even a high-fidelity TV amplifier could do with such a low-fidelity source. Several console sets currently on the market do offer pseudo-stereo sound, but without a stereo video-source (with the exception of a few laser videodiscs) or an established technical standard, there is little incentive to make a true-stereo receiver. That is about to change. More stereo VCR's, to join Akai's, the only one now on the market, will begin to appear here in 1982. They will be backed by a trickle of prerecorded-cassettes of concerts in stereo. Industry predictions are for that trickle to become a steady flow within a couple of years.

While two-channel TV broadcasting is now in service in Japan and, as of last September, in West Germany (one of the West German receivers is shown in Fig. 1), the concept is still in the testing stages in this country. The Multichannel Sound Subcommittee of the Electronic Industries Association (EIA) has completed over-the-air testing of three proposed stereo-broadcast techniques. Furthermore, tests are also under way to choose a noise-reduction system for the stereo broadcasts. Systems from Dolby, dbx, and CBS are those under consideration.

When stereo TV does arrive, you won't have to run out to buy a new TV set. You will suddenly find many stereo tuners available at your favorite video emporium. Some will receive only audio for headphone listening, or for patching into your hi-fi set-up. Others will also receive video for use with a video monitor: The age of video components will be upon us!

Flat-panel TV

Growing interest in home projection-television may be one of the reasons why TV researchers are working on a large, flat-panel television set. Typically, such a set would be just four inches deep and simply hang on a wall. Even now, the industry joke is that for the last 25 years, flat-panel home TV has been 10 years away. And true to form, last year RCA demonstrated a new technique for a wall-hung TV that they predicted would be on the consumer market "close to 1990." But with 100,000 or so American consumers having spent between $2500 and $4300 each for big-screen projection units in 1981, and with predictions of that interest tripling by 1984, it is likely that "breakthroughs" in technology will, indeed, make large wall-TV's affordable by 1990.

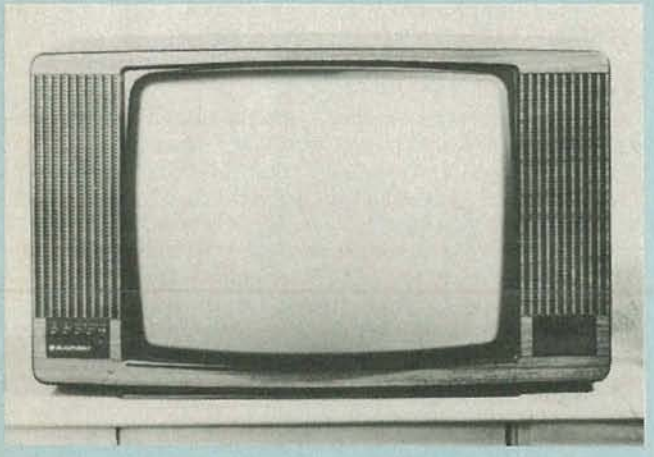

FIG. 1—CURRENTLY AVAILABLE in Japan and West Germany, two-channel TV audio should be here within the next few years. The receiver shown here is one of the new West German models.

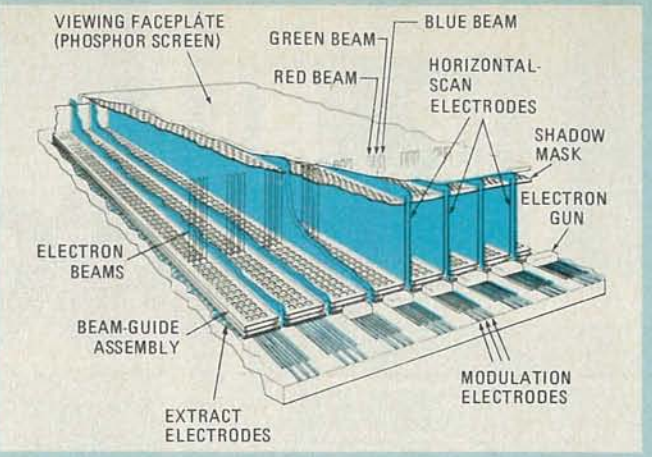

FIG. 2—TECHNICAL DETAILS of the RCA large-screen flat-panel TV. The receiver will have a 50-inch diagonal screen but measure just 4 inches thick, allowing it to be hung on a wall.

The RCA system under development consists of 40 one-inch-wide vertical modules, making up a 50-inch (diagonal measure) color-TV display panel, as shown in Fig. 2. Instead of a single electron beam sweeping across the face of a cathode-ray tube (CRT), each module in that system has its own electron beam, and those are turned on sequentially from left to right to produce a scan line that sweeps at the same speed as on a CRT. The beam is generated by electrodes along the back panel, only about four inches away from the face plate. It's a tricky system, to be sure, and one that will take some time to perfect, particularly in color.

We will, however, soon have a taste of flat TV, although in a pint-sized version. Portable and handheld flat-TV's from Sinclair and Japanese manufacturers like Toshiba, Hitachi, and Matsushita will start showing up on store shelves before the end of 1982. (See **Radio-Electronics**, October 1981 issue).

The Sinclair unit will probably be first, with its 3-inch diagonal CRT made flat by swinging the electron gun over to one side; a previously unsuccessful idea that had been researched for more than 25 years.

Soon after, solid-state LCD panels will make a super-slim pocket TV possible (see Fig. 3). The LCD display will actually be a mosaic of 52,800 picture elements, resulting in a receiver with a 2-inch (diagonal measure) black-and-white screen, such as the one Toshiba recently demonstrated.

Teletext/videotex

Of all the video applications of the future, probably none has had as much discussion—some of it quite heated—as teletext and videotex. Teletext is the one-way transmission of information over the air by a television broadcaster. The data is coded and sent along with the regular TV picture. It cannot be seen without a decoder, since it is located in one of the scanning lines found within the black horizontal bar that you see when your vertical hold needs adjustment. Videotex, also called viewdata, is a two-way interactive system that links your television to a central computer either by telephone lines or by a cable-TV hookup. Not only can you get the news, sports, and weather, as with teletext, but you can also place airline reservations, for example, by communicating with the computer using a small calculator-like keyboard wired to the TV.

Many U.S. and foreign-based manufacturers are interested in the potentially lucrative market in home (decoders, either attached to your TV set or built-in) and originating-station (broadcast encoders, computer data banks, etc.) equipment. Once a technical standard is established, we can expect a great many stations to begin transmitting teletext, just as they are currently transmitting closed captioning for the hearing-impaired; also, we can expect that videotex will be widely used by the many cable-TV systems already in operation.

Here is an example of what to expect by the late 1980's:

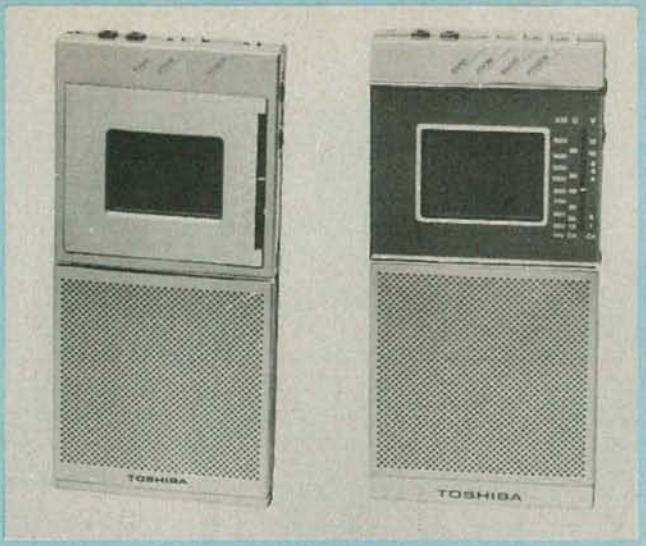

FIG. 3—THESE HAND-HELD televisions from Toshiba use two-inch diagonal flat-panel LCD displays.

FIG. 4—A TYPICAL VIDEOTEX menu. The one shown here lists financial news stories. To call up one of them, the appropriate code is keyed into the accompanying controller.

Let's say your old microwave oven finally bit the dust, and you feel it's time to buy a new one. You turn on your television, using its many-buttoned infrared remote control, and select the main menu listing the videotex services that are available on your cable system; a typical menu, in this case listing financial news stories, is shown in Fig. 4. Among the menu's listings is one called "Consumer Information," probably a good place to start. Entering the corresponding code using the remote control, another menu appears, listing several sources of consumer guidance. The one you want at the moment is comparative testing by an independent consumer lab. Continuing the process in the same manner soon leads you to the information available on microwave ovens.

Once you've found the unit with the features you want, when the proper buttons are pushed, the videotex system will display prices, service terms, and delivery information for the stocking dealers in your area. Next, using your personal bank code, you can use the system to see if you have enough money to pay for the oven, and if so, order it, arrange for delivery, and pay the dealer.

But you aren't done with your videotex system yet. If you wish, you can use it to get new recipes, and get a printout from a companion printer for future reference. You could also use the system to take a mini-course in microwave cooking, or any of the many other mini-courses offered. Some videotex systems may also offer typewriter-like keyboards that will let you type a letter or message, say to a friend, and then send it over the system to its destination.

Several of the services mentioned above are already available in England, where videotex and teletext have been in operation for the past few years. We'll also have them here, as soon as everyone agrees on which system to use.

One very important aspect of teletext/videotex is noted by Ed Tingley, staff vice-president of engineering for the EIA. He believes that the interactive use of television, "...will be the bridge between the public and their familiarity with data processing." Indeed, the TV viewer with a videotex controller in his or her hand will have access to a vast amount of computer-originated information.

Direct-broadcast satellites

To anyone who has wrestled with TV rabbit ears to get a reasonably clear picture of Lou Grant from a television station only 25 miles away, the idea of almost-perfect video from a satellite 22,300 miles away is mind-boggling. But, starting as early as the mid-1980's, that is exactly what will be happening. DBS (*D*irect *B*roadcast *S*atellite) satellites will soon join the dozens of other birds in geostationary orbits around the earth. (For a satellite to be in geostationary orbit, its orbital speed has to match precisely the speed of the Earth's rotation; to us on Earth, it seems to hang motionless in the sky.) Currently, geostationary satellites are used for military, commercial, telephone, pay TV, cable TV, and network-TV relays over long distances. The satellite dishes and receivers you now see advertised are designed to "eavesdrop" on the signals.

DBS satellite transmissions, however, are intended for home viewing. A relatively-high-power (about 100 watts) transmitter in the satellite will make it possible for almost anyone with a 2½-foot diameter dish to receive cable-quality signals.

Satellite Television Corporation has received FCC approval to go ahead with its plans for a 3-channel satellite network. Non-commercial programming will include movies, popular concerts, children's programs, sports, education, cultural programming, and more. The signals will be scrambled, so it will be a subscription type of service, costing around $25 per month (plus abut $100 for dish installation). Other services will be possible as part of the DBS network, with two-channel audio and teletext data among the most likely. The first Satellite Television Corporation bird is scheduled for 1985 launch, with a total of six satellites planned for complete U.S. coverage, as well as backups.

High-definition television

You can add a new set of letters to the video alphabet soup: HDTV, which stands for *H*igh-*D*efinition *TV*. Systems demonstrated by Matsushita and Sony have shown resolution equivalent to that of 35-millimeter motion-picture film. By comparison, today's color-TV image has resolution that is between that of 8-millimeter and 16-millimeter film.

The key to HDTV is squeezing more scan lines onto the screen: 1125 to be exact, compared with the U.S. standard of 525. Another part of HDTV is changing the aspect ratio (the ratio of the horizontal to the vertical screen dimensions) from today's 4:3 to at least 5:3 and perhaps 2:1—making the TV picture more rectangular, much like the screen in a movie theater. But before all of that can happen, a new standard, both for video cameras and receivers must be accepted.

An HDTV signal requires a lot more bandwidth than a standard transmission. While that may be a problem at first for broadcasters, wire and fiber-optic cable networks could easily handle the HDTV signals. Interestingly enough, the proposed DBS satellites will also be capable of relaying HDTV signals. Tests will likely be conducted early in the DBS program.

Combine an HDTV-quality picture with a large-screen projection receiver, like Matsushita's prototype, and you will really have a movie theater right in your living room.

3-D television

If you remember back to the 1950's, there were several films in which the action seemed literally to jump out at you. Of

A COMBINATION DBS/high-definition TV system is just one of the things we can look forward to. Such a system is shown here.

course, the images did not really jump out at you, but your brain was "tricked" into believing that they did. If you have ever seen one of those films, you have a pretty good idea of what 3-D television is all about.

Several significantly different systems for producing 3-D effects for home television are under study. All of the systems require the viewer to wear some sort of special glasses to see the 3-D effect; a few of the systems allow the viewer to see a standard, two-dimensional image without the glasses.

Matsushita has demonstrated a prototype system in which the viewer wears special glasses (see Fig. 5) that are connected to the TV. Electronically controlled polarized "shutters" over the left and right lenses are triggered by the vertical-sync signal; they open and close in time with the specially prepared program material. The stereoscopic effect can not be seen without the special glasses.

Another prototype system, called DOTS (*D*igital *O*ptical *T*echnology *S*ystem) electronically adapts an existing film for 3-D television broadcast. Essentially, the sytem analyzes the motion in a film, and separates the images into what appear to be three planes to anyone wearing the special glasses. The program material can also be viewed without the glasses, although the image will be two-dimensional. William Etra, DOTS inventor, concedes, however, that for the moment "...there is no compatible form of 3-D that compares with the total left-right separation of two taking lenses." Anyone who has used a stereo slide viewer knows what Mr. Etra means by total separation.

There is hope that 3-D and high-definition TV will make a successful combination. In such a system, a 1125-line color screen would have lines 1, 3, 5, etc. fed the signal from a left-taking camera, and lines 2, 4, 6, etc. fed the signal from a right-taking camera. Using polarizaton and a polarized viewer, the resolution of the resulting 3-D image would be equal to or better than today's TV image.

Cable TV will be the first to use 3-D television, mainly in an attempt to attract new subscribers. The 3-D material that will initially appear will most likely be specially prepared entertainment features, particularly movies produced to take the best advantage of 3-D effects. Shortly thereafter, educational programming may use 3-D for added clarity. Possible applications range from pre-school awareness drills ("near" vs. "far") to a college-level explanation of recombinant DNA.

All-in-one remote control

With all of the high-technology, home-entertainment equipment that will soon be available, it may be comforting to know that you may be able to link everything together and operate it

FIG. 5—THE IMAGE on the television would appear three dimensional to a viewer wearing special glasses in the Matsushita system.

all using a wireless, microprocessor-controlled remote unit. Among the things that such a remote-control system will allow you to do is program your VCR, monitor the outside of your house using your security-TV system, play a two-channel TV broadcast through your hi-fi amplifier, check the treble control of your stereo, and get the local weather from a videotex system.

Video after 1990

Work is already in progress on an international standard for digital television and the equipment to handle it. It is estimated that a color HDTV signal in digital form would require a digital VCR capable of recording at a rate of nearly 1 gigabit (1000 million bits) per second! Digital TV will help eliminate the differences between the three TV standards used throughout the world: NTSC, PAL, and SECAM. Material recorded in one part of the world could be viewed anywhere else without requiring costly scan conversion.

By the early 1990's, we may be reading about crude laboratory demonstrations of moving holographic images, television that will not be restricted to the two-dimensional plane of a video screen. When that system is finally perfected, we will be treated to images so realistic that it will seem as if our favorite entertainers were performing right there in our homes.

Television is evolving into more than a passive entertainment medium. Viewers will be choosing programming from an increasing number of sources, not just the traditional networks. Video equipment will be changing to give us more realism in sight and sound, better communications with the outside world, and more control over what we watch. This decade promises to be an exciting time for video. **R-E**